Measurement and Instrumentation

(Course Code: BEL04002)

Gyan Ranjan Biswal
PhD (IITR), FIE, SMIEEE, LMISTE
HOD and Associate Professor
Department of Electrical & Electronics Engineering (EEE)
Veer Surendra Sai University of Technology (formerly UCE), Burla
PIN – 768018, Sambalpur (Odisha), India

E-mail: gyanbiswal@vssut.ac.in
URL: http://www.vssut.ac.in
Google Scholar: Gyan Biswal
Home Page: http://in.linkedin.com/pub/gyan-biswal/14/458/a8
ORCID id: https://orcid.org/0000-0001-7730-1985

Contact Hours: Friday, *04:30 PM to 05:30 PM at E-106*

Gyan Ranjan Biswal received his B.E. in Electronics Engineering from the Pt. Ravishankar Shukla University, India in 1999 and M. Tech. (Honors) in Instrumentation & Control Engineering from the Chhattisgarh Swami Vivekananda Technical University, India in 2009 followed by Ph.D. in Electrical Engineering, specialized in the area of Power System Instrumentation (Power Generation Automation) from the Indian Institute of Technology Roorkee, India in 2012.

He is expertise in Design and Development of cooling systems for large size electrical generators, and the C&I of process industries. He has been in academia for about twelve years. Presently, he is with VSS University of Technology, Burla, India at the capacity of Head and Associate Professor, EEE from Dec. 2016. He has more than 70 publications in various Journals and Conferences of Internationally repute to his credit. He also holds a patent as well, and filed one more. He also adapted one international edition book published by Pearson India. He received research grants of US$90,000 (INR 53 lakhs). He has been supervised 01 PhD thesis and 09 Masters' theses. He has also been recognized with many national and international awards by elite bodies. He has been awarded with CICS award under the head of Indian National Science Academy for travel support to USA, MHRD Fellowship by Govt. of India, and Gopabandhu Das Scholarship in his career. His major areas of interests are Power System Instrumentation, Industrial Automation, Robust and Intelligent Control, the Smart Sensors, IoT enabled Smart Sensors, the Smart Grid, Fuel Cell lead Sustainable Sources of Energy, and System Reliability.

Dr. Biswal is a Fellow IE (India), Senior Member of IEEE, USA, and Life Member of ISTE, India. He is actively involved in review panels of different societies of international repute viz. IEEE, IFAC, and the ISA. Currently, he is also actively involved as a Member of IEEE–SA (Standards Association) working groups; IEEE P1876 WG, IEEE P21451-001 WG, and IEEE P1415. He has also been invited for delivering guest lectures at World Congress on Sustainable Technologies (WCST) Conf. 2012, London, UK, INDICON 2015, New Delhi, India, National Power Training Institute (NPTI), Nangal, India, and G.B. Pant Engineering College, Pauri, Gharwal, India, Surendra Sai University of Technology (formerly UCE), Burla, and as a guest expert in 2016 IEEE PES General Meeting Boston, MA, USA.

Syllabus

MODULE-I (8 HOURS) [Online mode: 6 HOURS + 1 Test]

Measuring Instruments: Classification, Absolute and secondary instruments, indicating instruments, deflecting, control and damping torques, Ammeters and Voltmeters, PMMC, Moving Iron (MI) type, expression for the deflecting torque and control torque, extension of range using shunts and series resistance. Electrostatic Voltmeters-electrometer type and attracted disc type, extension of range of E.S. Voltmeters.

MODULE-II (8 HOURS) [Online mode: 4 HOURS + 1 Test]

Electrodynamometer type wattmeter – Theory & its errors – Methods of correction – LPF wattmeter – Phantom loading – Induction type KWH meter – Calibration of wattmeter, energy meter. Measurement of active and reactive powers in balanced and unbalanced systems.

Galvanometers: General principle and performance equations of D'Arsonval Galvanometers, Vibration Galvanometer and Ballistic Galvanometer.

MODULE-III (8 HOURS) [Online mode: 6 HOURS + 1 Test]

DC/AC Bridges: General equations for bridge balance, measurement of self-inductance by Maxwell's bridge (with variable inductance & variable capacitance), Hay's bridge, Owen's bridge, measurement of capacitance by Schearing bridge, errors, Wagner's earthing device.

Method of measuring low, medium and high resistance: Kelvin's double bridge for measuring low resistance, Wheat-stone's bridge, measurement of high resistance – loss of charge method.

MODULE-IV (8 HOURS) [Online mode: 4 HOURS + 1 Test]

Instrument Transformers: Potential and current transformers, ratio and phase angle errors, phasor diagram, methods of minimizing errors.

Potentiometers: DC Potentiometer, Crompton potentiometer, construction, standardization, application. AC Potentiometer, Drysdale polar potentiometer; standardization, application.

MODULE-V (7 HOURS) [Online mode: 5 HOURS + 1 Test]

Digital Multi-meter: Block diagram, principle of operation, Accuracy of measurement, Electronic Voltmeter: Transistor Voltmeter, Block diagram, principle of operation, various types of electronic voltmeter, Digital Frequency meter: Block diagram, principle of operation.

Definition of transducers, Classification of transducers, Advantages of Electrical transducers, Characteristics and choice of transducers; Principle operation of LVDT and capacitor transducers; LVDT Applications, Strain gauge and its principle of operation, gauge factor.

Text and Reference Books

Recommended Text Books:

1. A K. Sawhney, "A Course in Electrical & Electronics Measurements & Instrumentation", Dhanpat Rai Publications.
2. Helfrick & Cooper, "Modern Electronic Instrumentation and Measurement Techniques", PHI Publishers.

Reference Books:

* Larry Jones & A Foster Chin, "Electronic Measurement & Instrumentation Systems", John Wiley & Son Publishers.
* Golding & Waddis, "Electrical Measurement and Measuring Instruments", Reem Publishers.
* David A. Bell, "Electronic Instrumentation and Measurements", 3rd ed., Oxford University Press.
* P. Purkait, B. Biswas, S. Das and C. Koley, "Electrical and Electronics Measurement and Measuring Instruments", McGraw Hills.

Other Important References

Reference Sites:	
1.	NPTEL, The National Programme on Technology Enhanced Learning (NPTEL): https://nptel.ac.in/

Course Outcomes

Upon successful completion of this course, you (students) will be able to

CO1	**Understand the principles of basic electrical measuring instruments.**
CO2	Understand the operation of wattmeter, energy meter and galvanometers.
CO3	Understand and analyze the working of different ac and dc bridges.
CO4	Understand the operation of instrument transformers and potentiometers.
CO5	Understand the operation of electronic measuring instruments and transducers.

Measuring Instruments

❖ Draw an equivalent schematic diagram of measurement and control system for the industry applications?

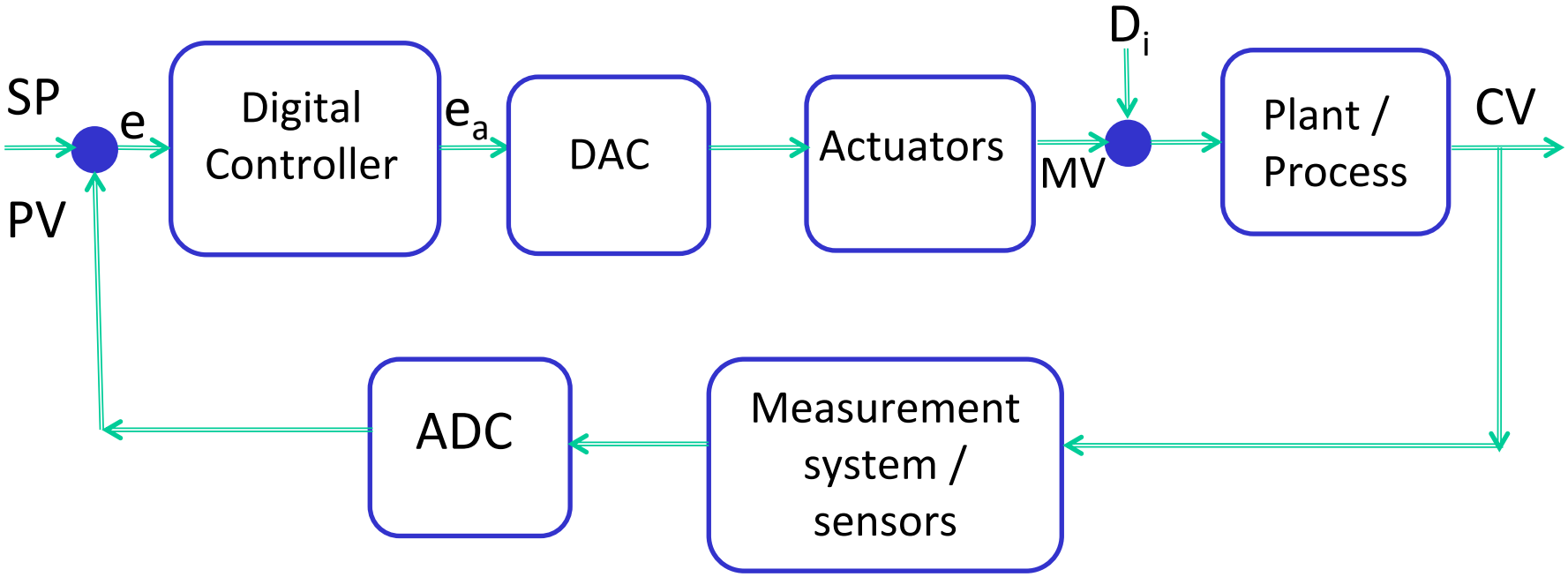

- Measurement: involves using an instrument as a physical means of determining a quantity / variable.

Or

is act of assigning a number to an attribute or physical quantity. It must contain some unit according to some set of rules.

Or

is act, or the result, of a quantitative comparison between a given quantity and a quantity of the same kind chosen as unit.

- Instruments: a device for determining the value / magnitude of a quantity/ variable.

- Instrumentation: measurement of non-electrical quantities by means of electrical methods connected / integrated alone with the signal conditioning circuits.

❖Industrial Instrumentation ???

❖ Why do we need measurement?

- To monitor (parameters), control and experimental engineering analysis.

❖ Scale: Nominal scale (classification/ rough idea); ordinal scale (ranking); interval scale (range), and ratio scale (0 has no meaning in this scale).

Electromechanical Indicating Instruments

- To familiarize the d'Arsonval meter movement, how it is used in ammeters, voltmeters, and ohmmeters, some of its limitations, as well as some of its applications.

Introduction

Meter: Any device built to accurately detect & display an electrical quantity in a form readable by a human being to **accurately measure** the basic quantities of voltage, current, and resistance.

Readable form

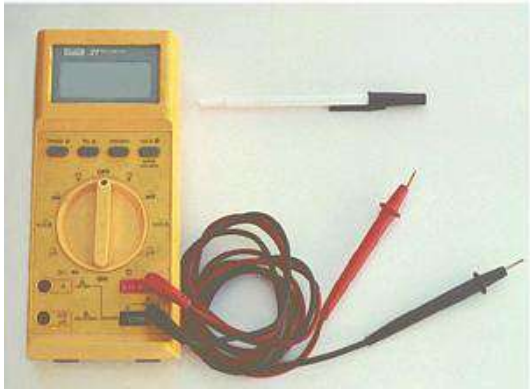

- Visual
- Motion of pointer on a scale
- Series of light (digital)

The d'Arsonval Meter

Hans Oersted (1777-1851)

Danish physicist who discovered the relationship between current and magnetism – from the deflection of a compass needle

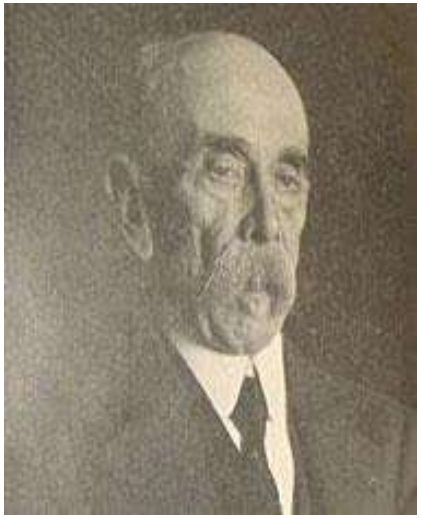

Jacques d'Arsonval (1851-1940)

French physiologist who discovered the moving-coil galvanometer – from muscle contractions in frogs using a telephone, which operates on an extremely feeble currents similar to animal electricity

The d'Arsonval Meter

- In 1880s, two French inventors: Jacques d'Arsonval and Marcel Deprez patented the moving-coil galvanometer.

Jacques d'Arsonval
(1851 – 1940)

Deprez-d'Arsonval Galvanometer

Marcel Deprez
(1843 – 1918)

Alternating Current Waveform

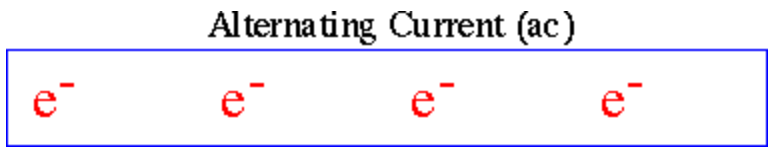

Sinusoidal wave

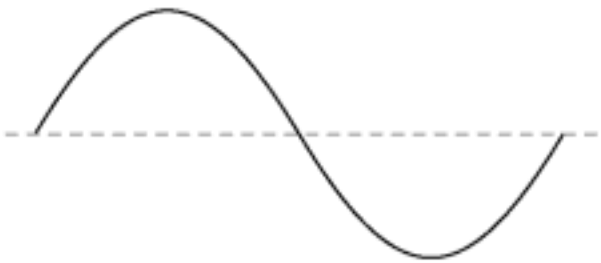

RMS = 0.707 (Peak)

AVG = 0.637 (Peak)

P-P = 2 (Peak)

Square wave

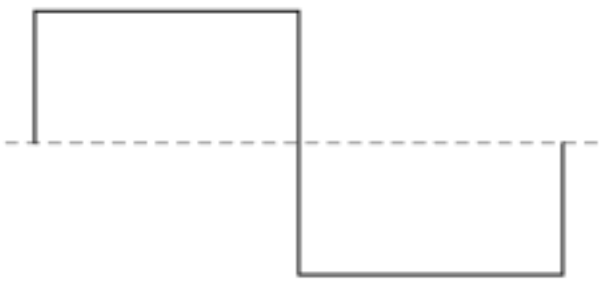

RMS = Peak

AVG = Peak

P-P = 2 (Peak)

Triangle wave

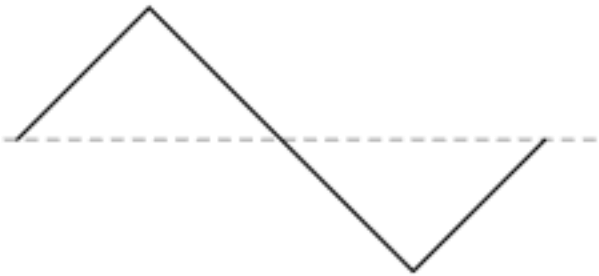

RMS = 0.577 (Peak)

AVG = 0.5 (Peak)

P-P = 2 (Peak)

Alternating Current Waveform

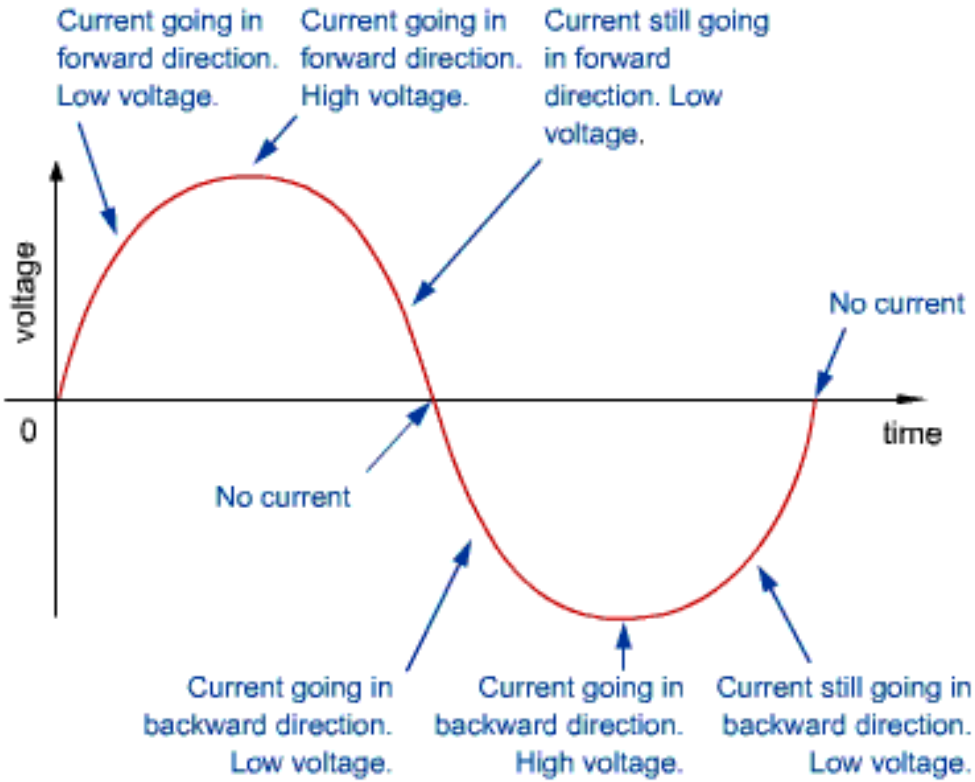

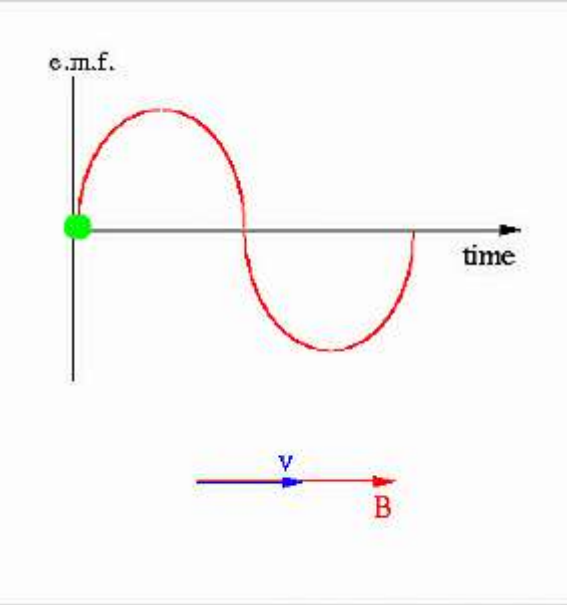

E_{rms}= E(root mean square), $E_{p\text{-}p}$= E peak-peak, E_p= E peak

$V_{avg} = 0$
$V_{rms} = 0.707V_p$

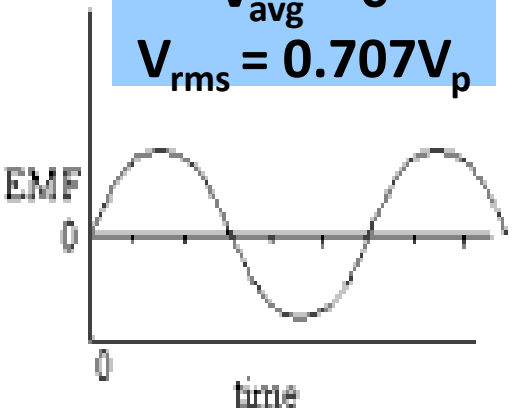

Simple single phase AC

$V_{avg} = 0.318V_p$
$V_{rms} = 0.5V_p$

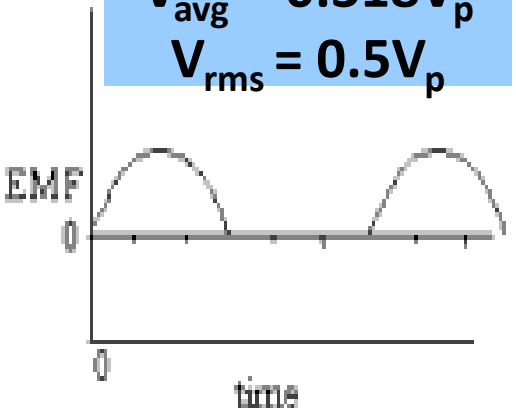

Single phase half wave rectified AC

$V_{avg} = 0.636V_p$
$V_{rms} = 0.707V_p$

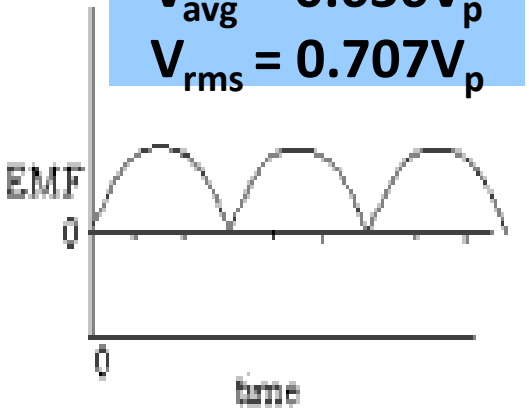

Single phase full wave rectified AC

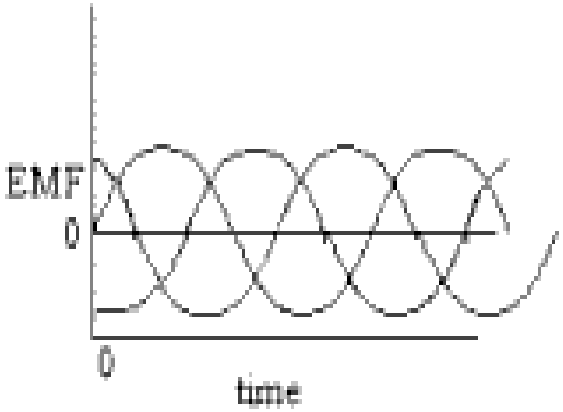

Three phase AC

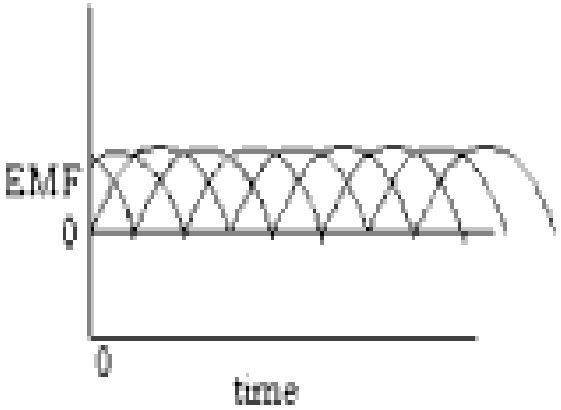

Three phase full wave rectified AC

Average and RMS Value

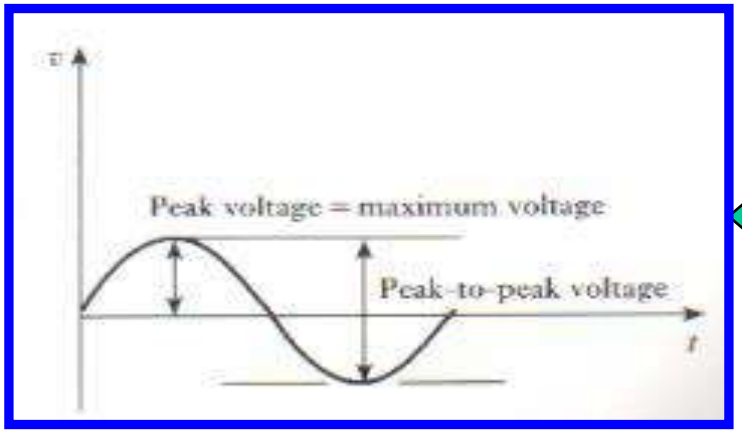

Sine Wave

$V_{avg} = 0$

$V_{rms} = 0.707V_p$

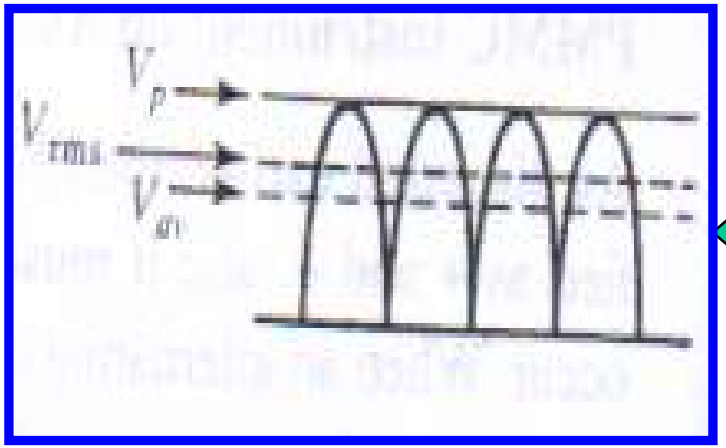

Full Wave

$V_{avg} = 0.636V_p$

$V_{rms} = 0.707V_p$

Cont..

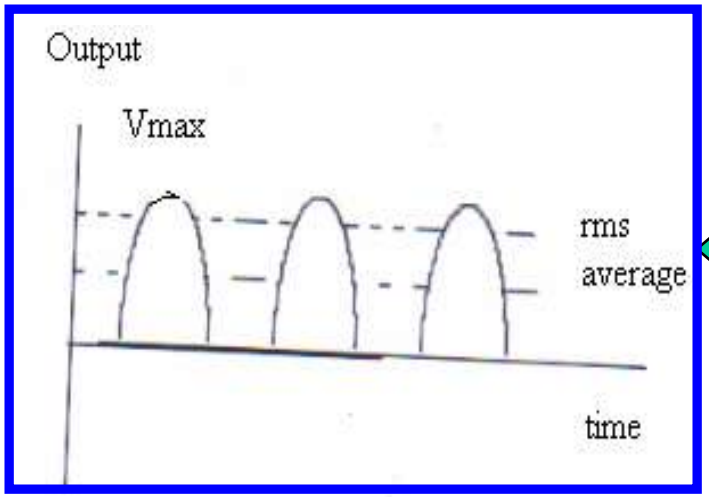

$V_{avg} = 0.318V_p$

$V_{rms} = 0.5V_p$

Half Wave

Types of Measuring Instruments

- permanent magnet moving-coil (PMMC) – most accurate type for DC measurement
- Moving Iron
- Electrodynamometer
- Hot wire
- Thermocouple
- Induction Type
- Electrostatic
- Rectifier

❖ Five principal meter movements used in ac instrument

1. Electrodynamometer
2. Iron Vane
3. Electrostatic
4. Thermocouple
5. D'Arsonval with rectifier

Application of meter movements:

Meter Movement	DC Use	AC Use	Applications
Electrodynamometer	YES	YES	Standards meter, wattmeter, frequency meter "Indicator" applications such as in automobiles
Iron Vane	YES	YES	"Indicator" applications such as in automobiles
Electrostatic	YES	YES	Measurement of high voltage when very little current can be supplied by the circuit being measured
Thermocouple	YES	YES	Measurement of radio frequency ac signal
D'Arsonval	YES	YES with rectifier	Most widely used meter movement for measuring direct current or voltage and resistance

The D'Arsonval Meter Movement

PMMC

- The basic moving coil system generally referred to as a d'Arsonval meter movement or Permanent Magnet Coil (PMMC) meter movement.
- Current-sensitive device capable of directly measuring only very small currents.
- **Range**: 10µA -100mA
- **Coil resistance**: 10Ω – 1kΩ
- **Usage**:

✓ dc PMMC ammeters and voltmeters

✓ ac PMMC ammeters and voltmeters (with rectifiers).

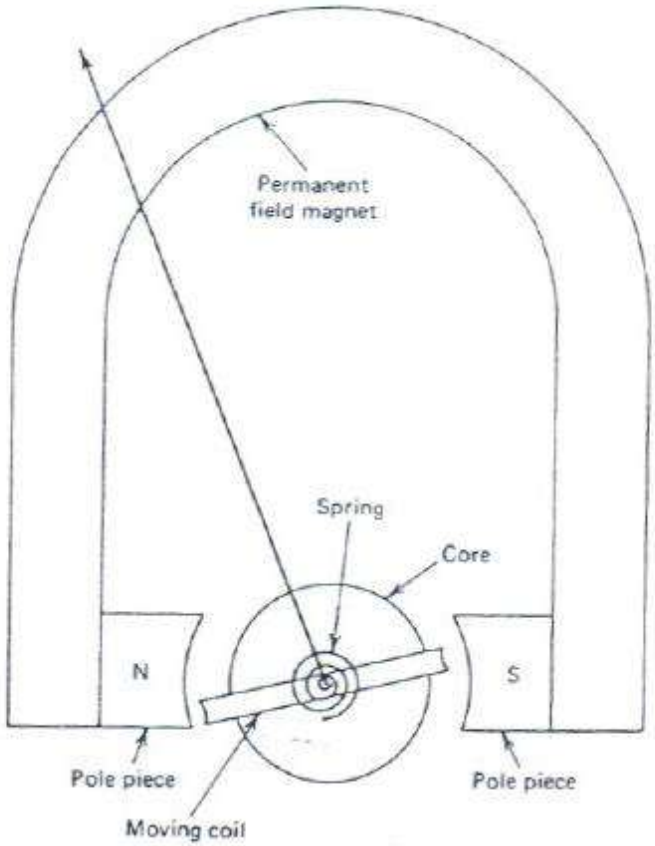

Fig 1: The d'Arsonval meter movement

PMMC

Permanent magnet, moving coil (PMMC) meter movement

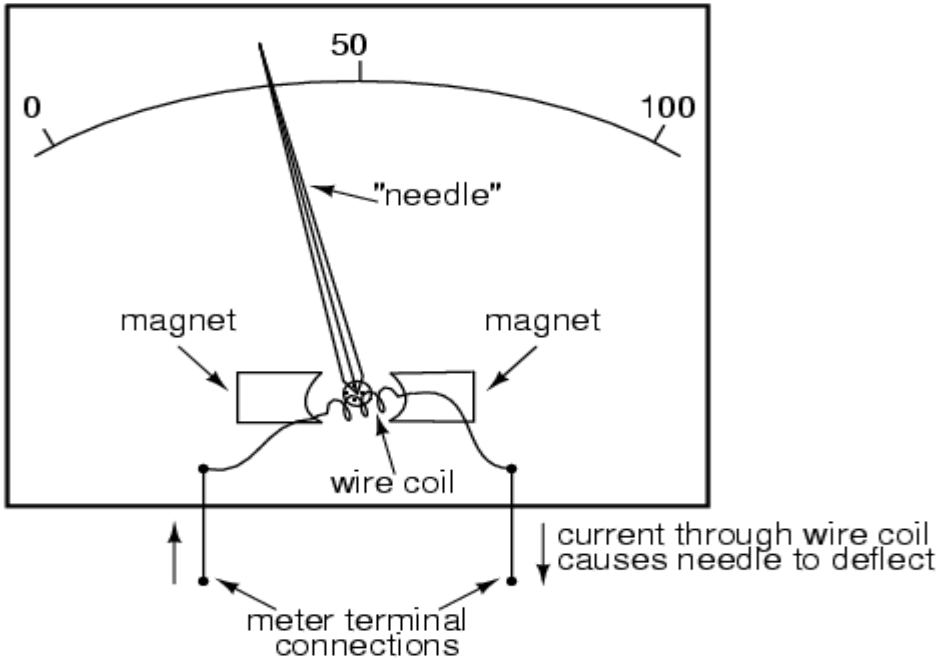

Current from the circuit in which measurements are being made with the meter passes through the windings of the moving coil. Current through the coil causes it to behave as an electromagnet with its own north and south poles. The poles of the electromagnet interact with the poles of the permanent magnet, causing the coil to rotate. The pointer deflects up scale whenever current flows in the proper direction in the coil. **For this reason, all dc meter movements show polarity markings.**

PMMC

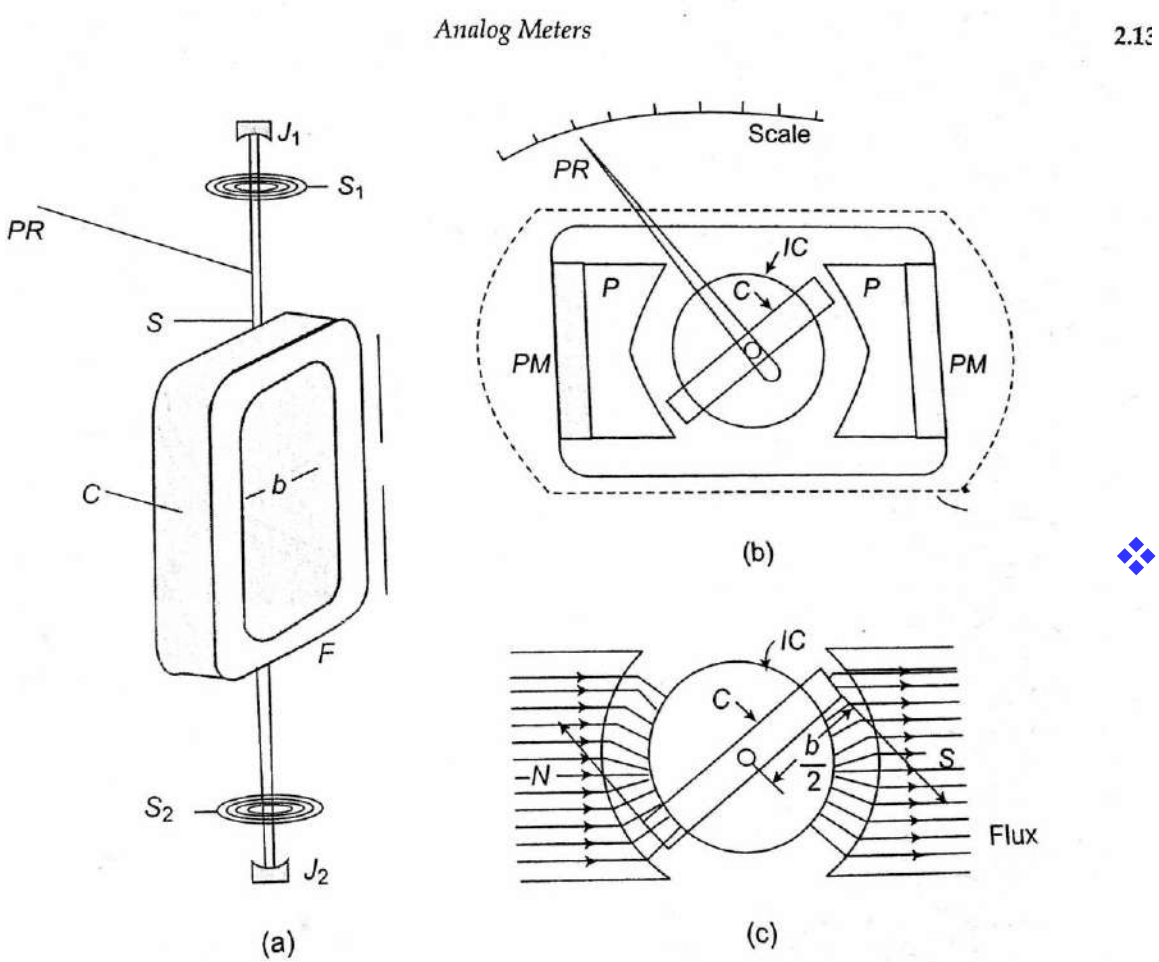

Permanent magnet moving coil instrument

C- coil has number of turns
J1, J2 – Jewel bearing
PR- a pointer
pp- soft iron pole piece
PM- permanent magnet

❖ The principle on which a PMMC is working is that a torque is excited on a current-carrying coil placed in the field of a permanent magnet.

PMMC

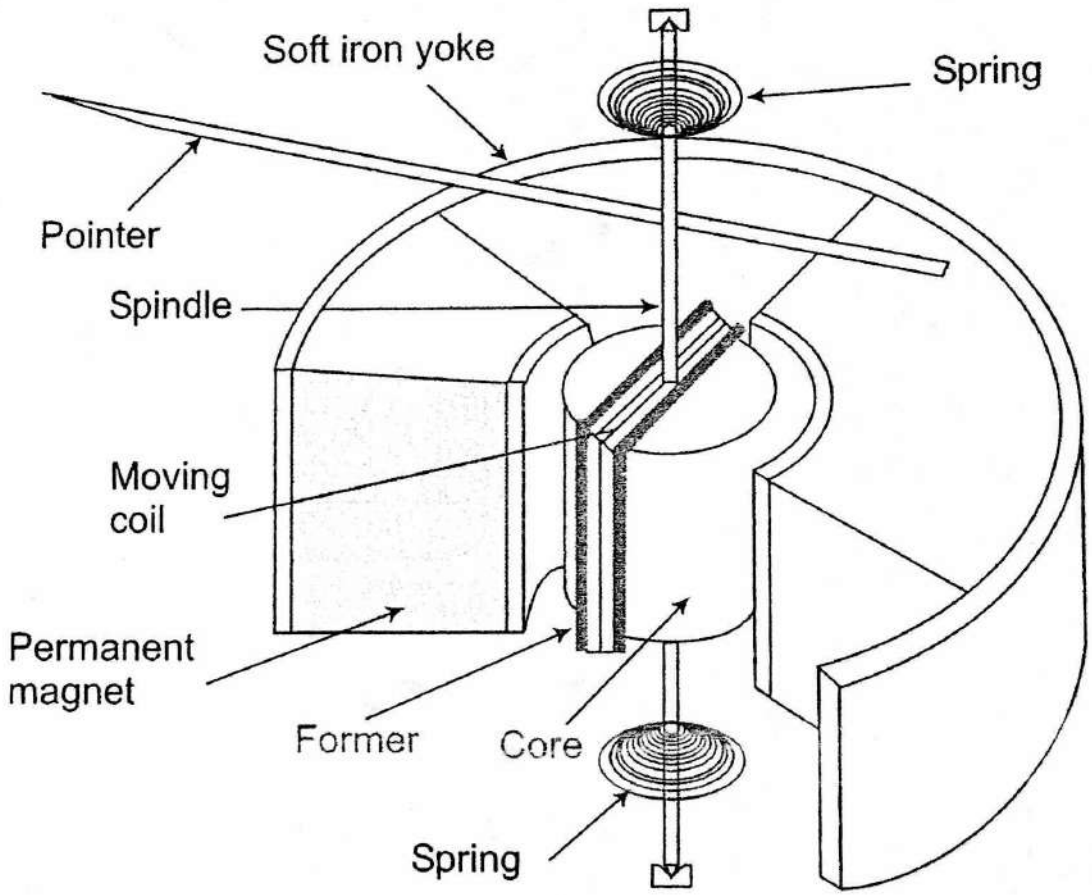

(e)

Internal construction of PMMC instruments

❖ Deflecting Torque Equation of PMMC Instrument

Let, B = flux density in the air gap (wb/m^3)
i = current in the coil (A) ; l = effective axial length of the coil (m);
b = breadth of the coil (m) ; n = number of turns of the coil.

✓Now force on one side of the coil is

$$F = Biln \text{ (N)}$$

✓Torque on each side of the coil,

$$T = F \times b/2 \text{ (N)}$$

Whereas, b/2 = distance from axis of rotation

✓Total deflecting torque exerted on the coil ???

PMMC

✓Total deflecting torque exerted on the coil,

$$T_d = 2 \times T = 2 \times F \times b/2 \text{ (N)}$$

$$= Bilnb \text{ (N-m)}$$

✓ for a permanent magnet, B is a constant; also for a given coil, l, b and n are constant.

Therefore, $T_d = k1 \times i$

PMMC

✓Control Torque: the control of the movement of the pointer over the scale is provided by the spirally wound, phosphor-bronze springs S1 and S2, and a spindle S.

✓ the control torque is proportional to angle θ turned through the coil.

$$T_c = ks \times \theta$$

PMMC

✓At steady state condition: **control torque = deflection torque**

$$T_c = ks \times \theta = T_d = k1 \times I$$

$$As, \theta \ \alpha \ I$$

***Thus, the scale of the instrument is linear or uniformly divided*.**

PMMC

❖NOTE: damping torque (eddy current damping)

❖ Swamping Resistor: the coil of the instrument is made of copper. Its resistance varies with temperature. A resistor of low temperature coefficients, called the swamping resistor, is connected in series with the coil. Its resistance practically remains constant with temperature. Hence the effect of temperature on coil resistance is swamped by the resistor.

PMMC Instrument on AC

- The PMMC instrument is **polarized** (terminals +ve & -ve) - it must be connected correctly for positive (on scale) deflection to occur.

- When an AC with a very low frequency is passed through a PMMC, the pointer tends to follow the instantaneous level of the AC.

- As the current grows positively, the pointer deflection increases to a maximum at the peak of the AC.

- As the instantaneous current level falls, the pointer deflection decreases toward zero. When the AC goes negative, the pointer deflected (off scale) to the left of zero.

- **This kind of pointer movement can occur only with AC having a frequency of perhaps <u>0.1Hz or lower</u>.**

PMMC Instrument on AC

- **At 50Hz or higher supply frequencies** - the damping mechanism of the instrument and the inertia of the meter movement prevent the pointer from following the changing instantaneous levels.
- The average value of purely sinusoidal AC is zero.
- Therefore, a PMMC instrument connected directly to measure 50Hz AC indicates zero average value.
- It is important to note that although a PMMC instrument connected to an ac supply may indicating zero, there can actually be very large rms current flowing in its coils

- Two types of PMMC meter used in AC measurement :

1. Half wave rectification
2. Full wave rectification

D'Arsonval meter movement used with <u>half wave</u> rectification

To convert alternating current (AC) to unidirectional current flow, which produces positive deflection when passed through a PMMC, the diode rectifier is used. Several types of rectifiers are selected such as a copper oxide rectifier, a vacuum diode, or semiconductor or "crystal diode".

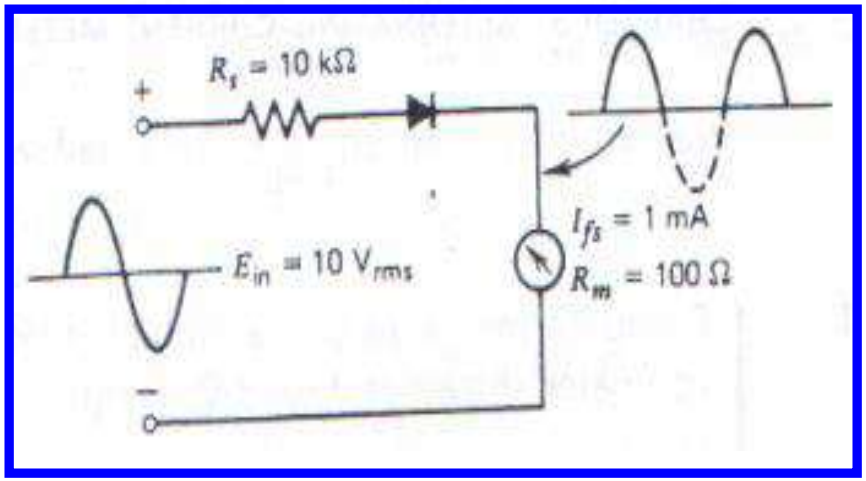

$$V_{rms} = \frac{V_P}{2} = 0.5V_P$$

$$V_{ave} = V_{dc} = 0.318\,V_p$$

$$V_{ave} = \frac{V_p}{\pi} = \frac{\sqrt{2} \times V_{rms}}{\pi} = 0.45V_{rms}$$

Cont…

- For example, if the output voltage from a half wave rectifier is $10V_{rms}$ so the dc voltmeter will provide an indication of approximately 4.5V dc $\rightarrow$ Therefore, the pointer deflected full scale when 10V dc signal is applied.

- When we apply a 10Vrms sinusoidal AC waveform, the pointer will deflect to 4.5V $\rightarrow$ This means that the AC voltmeter is not as sensitive as DC voltmeter.

- In fact, **an AC voltmeter using half wave rectification is only approximately 45% as sensitive as a dc voltmeter.**

Cont…

- Actually, the circuit would probably be designed for full-scale deflection with a 10V rms AC applied, which means the multiplier resistor would be only 45% of the value of the multiplier resistor for 10V dc voltmeter. Since we have seen that the equivalent dc voltage is equal to 45% of the rms value of the ac voltage.

$$R_s = \frac{E_{dc}}{I_{dc}} - R_m = \frac{0.45E_{rms}}{I_{dc}} - R_m$$

$$\boxed{S_{ac} = 0.45S_{dc}}$$

Cont..

Commercially produced ac voltmeters that use half wave rectification also has an additional diode and a shunt as shown in Figure below:

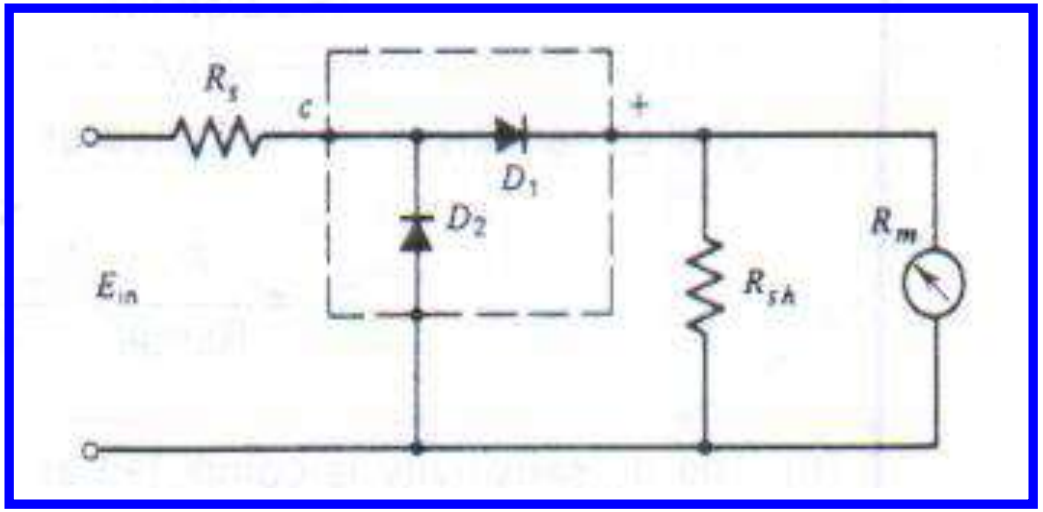

Cont..

- The additional diode D2 is reverse biased on the positive half cycle and has virtually no effect on the behavior of the circuit.
- In the negative half cycle, D2 is forward biased and provides an alternate path for reverse biased leakage current that would normally through the meter movement and diode D1.
- The purpose of the shunt resistor R_{sh} is to increase the current flow through D1 during positive half cycle so that the diode is operating in a more linear portion of its characteristic curve.
- Although this shunt resistor improves the linearity of the meter on its low voltage ac ranges, it also further reduces the AC sensitivity.

Benefits

- sensitive to the small current
- accurate and reliable
- uniform scale up to 270 degree or more
- effective built-in damping
- low power consumption: 25 µW – 200 µW
- free from hysteresis and not effected by the external fields because of its permanent magnet shields the coil from external magnetic fields.
- easily adopted as a multi-range instrument.

Limitations

- this type of instrument suits for DC only. In AC, the instrument does not operate because of equal amount force experienced by the pointer but opposite direction. Due to the inertia of the pointer, it (pointer) remains at zero position.
- the moving system is highly delicate so needs careful handling.
- the coil being very fine, can not withstand prolonged overloading.
- Costlier
- Error occur at the later stage due to Ageing effect (permanent magnet and control spring).

D'Ársonval Meter Movement: PMMC used in a DC Ammeter

- Since the windings of the moving coil are very fine wire, the basic d'Arsonval meter movement has only limited usefulness without modification.
- One desirable modification is to increase the range of current that can be measured with the basic meter movement.
- This done by placing a low resistance called a shunt (R_{sh}), and its function is to provide an alternate path for the total metered current 'I' around the meter movement.

Basic DC Ammeter Circuit

Where,

R_{sh} = resistance of the shunt
R_m = **internal resistance** of the meter movement (resistance of the moving coil)
I_{sh} = current through the shunt
I_m = full-scale deflection current of the meter movement
I = full-scale deflection current for the ammeter

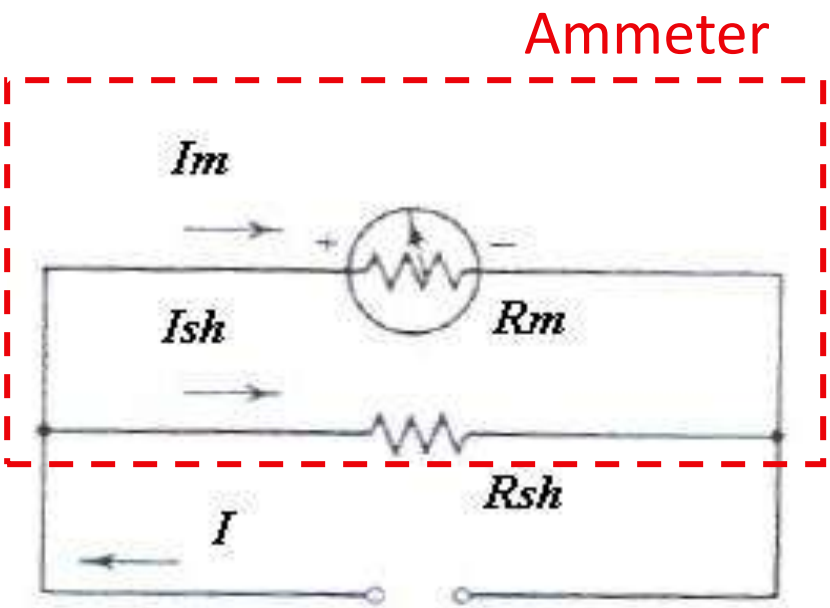

Fig. 1-2 D'Ársonval meter movement used in ammeter circuit

In most circuits, $I_{sh} >> I_m$

- The voltage drop across the meter movement is

$$V_m = I_m R_m$$

- The shunt resistor is parallel with the meter movement, thus the voltage drop for both is equal

$$V_{sh} = V_m$$

- Then the current through the shunt is,

$$I_{sh} = I - I_m$$

Then we can get shunt resistor as

$$R_{sh} = \frac{V_{sh}}{I_{sh}} = \frac{I_m R_m}{I_{sh}} = \frac{I_m}{I_{sh}} R_m = \frac{I_m}{(I - I_m)} R_m \ldots\ldots\ldots\ldots\ldots 1.0$$ Ohm

Example 1-1

Calculate the value of the shunt resistance required to convert a 1-mA meter movement, with a 100-ohm internal resistance, into a 0- to 10-mA ammeter?

Solution:

$$V_m = I_m R_m = 1mA \times 100\Omega = 0.1V$$

$$V_{sh} = V_m = 0.1V$$

$$I_{sh} = I - I_m = 10mA - 1mA = 9mA$$

$$R_{sh} = \frac{V_{sh}}{I_{sh}} = \frac{0.1V}{9mA} = 11.11\Omega$$

Ayrton Shunt or Universal Shunt

William Edward Ayrton studied under Lord Kelvin at Glasgow. In 1873 he was appointed to the first chair in natural philosophy and telegraphy at Imperial Engineering College, Tokyo. In 1879 he was the first to advocate power transmission at high voltage, and with John Perry (1850-1920) he invented the spiral-spring ammeter, the wattmeter, and other electrical measuring instruments. The ammeter (a contraction of ampere meter) was one of the first to measure current and voltage reliably. They also worked on railway electrification, produced a dynamometer and the first electric tricycle.

William Edward Ayrton (1847-1908)
British Engineer

The Ayrton Shunt

- The purpose of designing the shunt circuit is to allow to measure current I that is some number *n* times larger than I_m.
- The number n is called a multiplying factor and relates total current and meter current as

$$I = nI_m$$

- We can get shunt resistance with n times larger than I_m is

$$R_{sh} = \frac{R_m}{n-1}$$

Examples 1-2

- A 100 μA meter movement with an internal resistance of 800 Ω is used in a 0- to 100 mA ammeter. Find the value of the required shunt resistance.

  Answ: ~ 0.80 ohm

Advantages of the Ayrton:

- Eliminates the possibility of the meter movement being in the circuit without any shunt resistance.
- May be used with a wide range of meter movements.

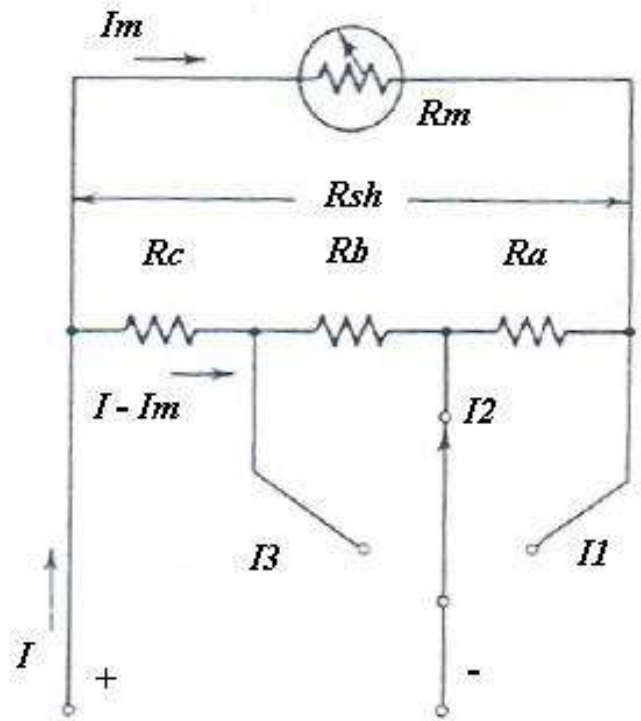

Ayrton shunt circuit

- The individual resistance values of the shunts are calculated by starting with the most sensitive range and working toward the least sensitive range
- The shunt resistance is $$R_{sh} = R_a + R_b + R_c$$
- On this range the shunt resistance is equal to R_{sh} and can be computed by Equation

$$R_{sh} = \frac{R_m}{n-1}$$

$$R_b + R_c = \frac{I_m(R_{sh} + R_m)}{I_2}$$

$$R_c = \frac{I_m(R_{sh} + R_m)}{I_3}$$

$$R_a = R_{sh} - (R_b + R_c)$$

$$R_b = (R_b + R_c) - R_c$$

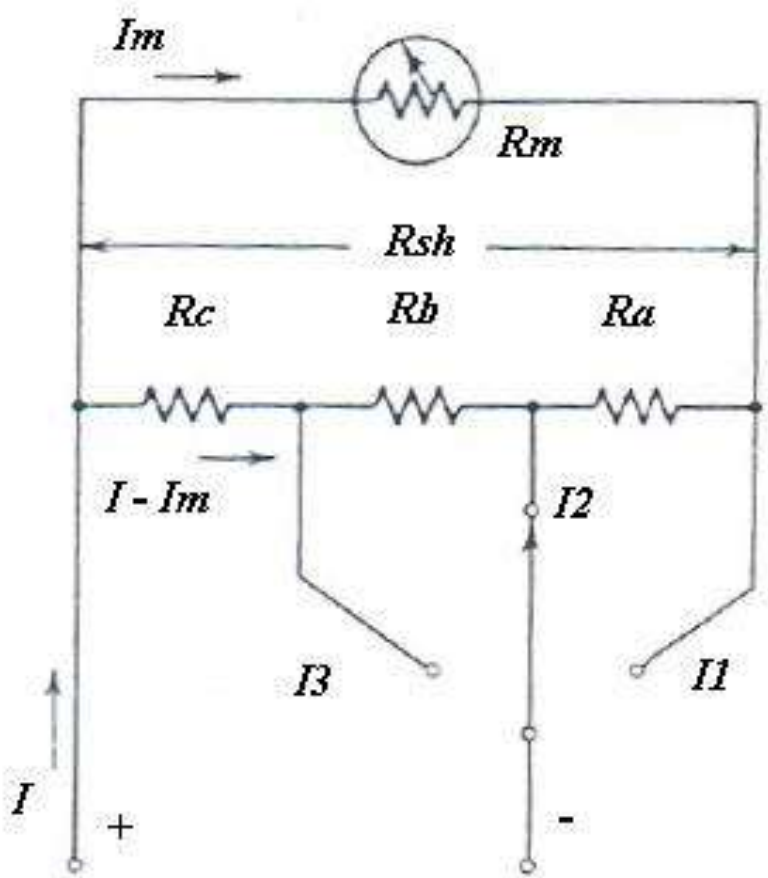

D'Ársonval Meter Movement: PMMC used in A DC Voltmeter

- The basic d'Ársonval meter movement can be converted to a dc voltmeter by connecting a multiplier R_s in series with the meter movement
- The purpose of the multiplier:
  - is to extend the voltage range of the meter
  - to limit current through the d'Arsonval meter movement to a maximum full-scale deflection current.

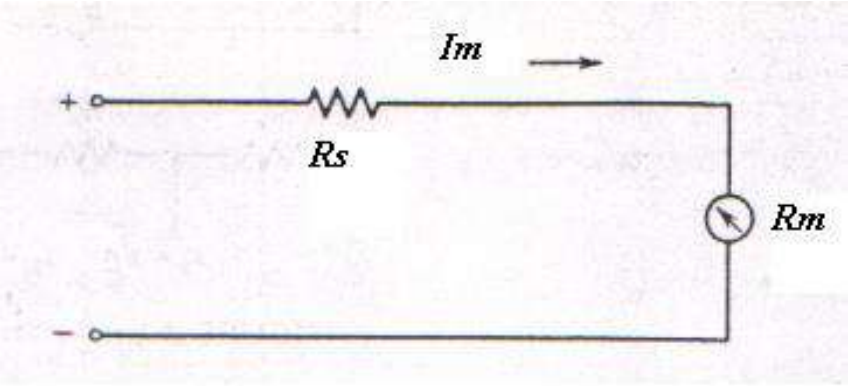

Fig 2-1 The basic d'Arsonval meter Movement Used In A DC Voltmeter

- To find the value of the multiplier resistor, first determine the sensitivity, S, of the meter movement.

$$\text{Sensitivity} = \frac{1}{I_{fs}} \quad (\Omega/\text{V})$$

$$R_s = S \times \text{Range} - \text{Internal Resistance}$$

Example 1-2

- Calculate the value of the multiplier resistance on the 50V range of a dc voltmeter that used a 500μA meter movement with an internal resistance of 1kΩ ?

Sensitivity, $$S = \frac{1}{I_{fs}} = \frac{1}{500\mu} = 2k\,\Omega/V$$

Multiplier, R_s = S X Range – internal Resistance

= (2k X 50) – 1k

= 99kΩ

Voltmeter Loading Effects

When a voltmeter is used to measure the voltage across a circuit component, the voltmeter circuit itself is in parallel with the circuit component. Since the parallel combination of two resistors is less than either resistor alone, the resistance seen by the source is less with the voltmeter connected than without. Therefore, the voltage across the component is less whenever the voltmeter is connected. The decrease in voltage may be negligible or it may be appreciable, depending on the sensitivity of the voltmeter being used. This effect is called voltmeter loading. The resulting error is called a loading error.

Sensitivity of the voltmeter ?

Example 1-3

- Two different voltmeters are used to measure the voltage across resistor R_B in the circuit of Figure 2-2. The meters are as follows.

Meter A : S = 1kΩ/V, Rm = 0.2kΩ,
range = 10V
Meter B : S = 20kΩ/V, Rm = 1.5kΩ,
range=10V

Calculate:

(a) Voltage across R_B without any meter connected across it.

(b) Voltage across R_B when meter A is used.

(c) Voltage across R_B when meter B is used

(d) Error in voltmeter readings.

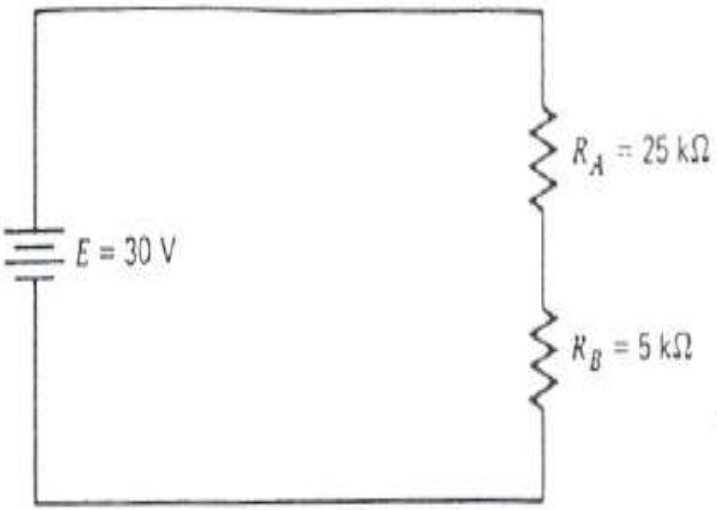

Fig. 2.2

Solution:

(a) The voltage across resistor R_B without either meter connected is found Using the voltage divider equation:

$$V_{RB} = E\left[\frac{R_B}{(R_A + R_B)}\right]$$

$$= 30\text{V}\left[\frac{5\text{k}\Omega}{25\text{k} + 5\text{k}}\right]$$

$$= 5\text{V}$$

(b) starting with meter A, the total resistance it presents to the circuit is

$$R_{TA} = S \times \text{Range} = 1\text{k/V} \times 10\text{V} = 10\text{k}\Omega$$

The parallel combination of RB and meter A is

$$R_{e1} = \frac{R_B \times R_{TA}}{R_B + R_{TA}}$$

$$= \frac{5\text{k}\Omega \times 10\text{k}\Omega}{5\text{k}\Omega + 10\text{k}\Omega}$$

$$= 3.33\text{k}\Omega$$

Therefore, the voltage reading obtained with meter A, determined by the voltage divider equation, is

$$V_{RB} = E\left[\frac{R_{e1}}{R_{e1} + R_A}\right]$$

$$= 30\text{V} \times \frac{3.33\text{k}\Omega}{3.33\text{k}\Omega + 25\text{k}\Omega}$$

$$= 3.53V$$

Cont…

(c) The total resistance that meter B presents to the circuit is

R_{TB} = S x Range = 20k/V x 10 V = 200 kΩ

The parallel combination of R_B and meter B is

$R_{e2} = (R_B \times R_{TB})/(R_B + R_{TB})$ = (5kx200k)/(5k+200k) = 4.88 kΩ

Therefore, the voltage reading obtained with meter B, determined by use of the voltage divider equation, is

$V_{RB} = E(R_{e2})/(R_{e2}+R_A)$ = 30 V x (4.88k)/(4.88k+25k)
= 4.9 V

(d)

$$\text{Voltmeter A error} = \frac{(\text{Expected value} - \text{Measured value})}{\text{Expected value}} \times 100\%$$

Voltmeter A error = (5 V – 3.53 V)/5 V x (100%

= 29.4%

Voltmeter B error = (5 V – 4.9 V)/5 V x (100%)

= 2 %

Ammeter insertion effects

- Inserting an ammeter in a circuit always increases the resistance of the circuit and reduces the current in the circuit. This error caused by the meter depends on the relationship between the value of resistance in the original circuit and the value of resistance in the ammeter.

** For high range ammeter, the internal resistance in the ammeter is low.

** For low range ammeter, the internal resistance in the ammeter is high.

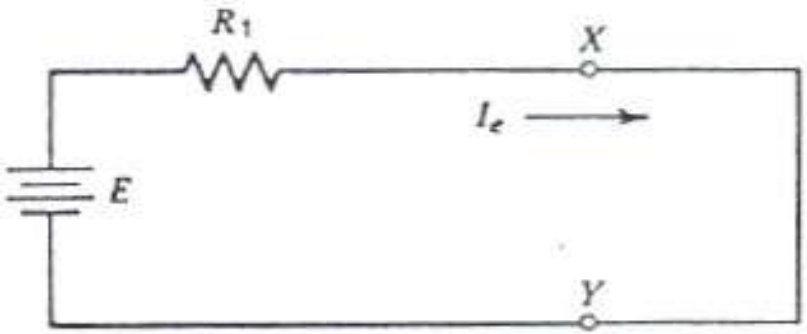

$$I_e = \frac{E}{R_1}$$

Fig. 2-3: Expected current value in a series circuit

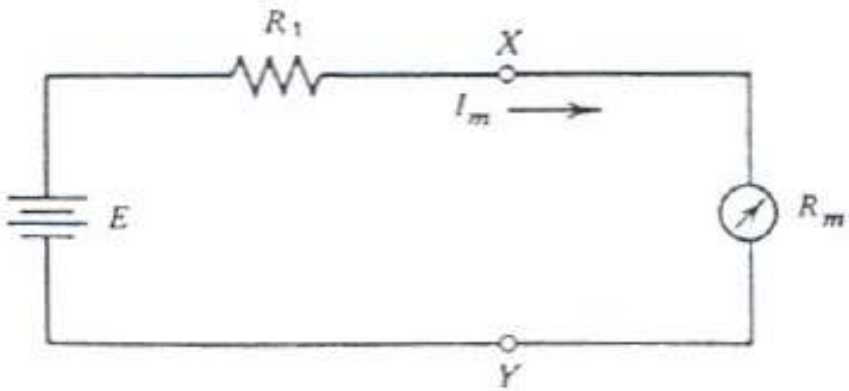

$$I_m = \frac{E}{R_1 + R_m}$$

Fig 2-4: Series circuit with ammeter

hence;

$$\frac{I_m}{I_e} = \frac{R_1}{R_1 + R_m}$$

Therefore

Insertion error = $$\left(1 - \frac{I_m}{I_e}\right) \times 100\%$$

Example 1-4

A current meter that has an internal resistance of 78 ohms is used to measure the current through resistor R_c in Fig. 2.5. Determine the percentage of error of the reading due to ammeter insertion.

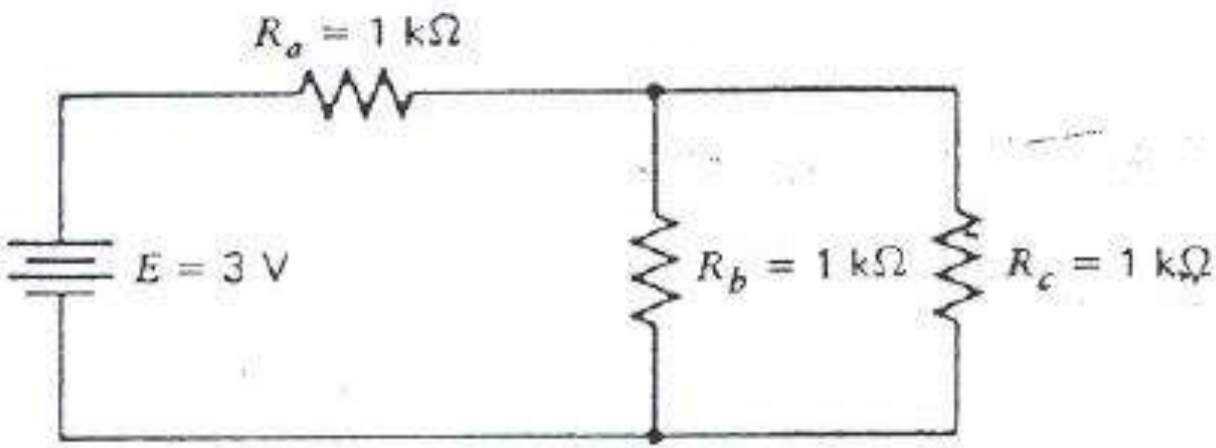

Fig. 2.5

Solution:

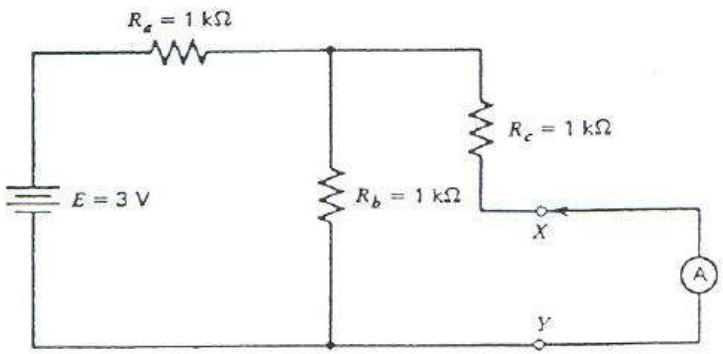

Fig. 2-6

The current meter will be connected into the circuit between points X and Y in the schematic in Fig. 2.6. When we look back into the circuit from terminals X and Y, we can express Thevenin's equivalent resistance as

$$R_{TH} = R_c + \frac{(R_a R_b)}{(R_a + R_b)}$$

R_{TH} = 1 k + 0.5 k = 1.5 kΩ

Therefore, the ratio of meter current to expected current:

$$\frac{I_m}{I_e} = \frac{R_1}{(R_1 + r_m)}$$

I_m/I_e= 1.5 k/(1.5 k + 78) = 0.95

Solving for I_m yields, $I_m = 0.95 I_e$

Insertion error = [1 – (I_m/I_e)] x 100% = 5.0%

The Ohmmeter (Series ohmmeter)

The ohmmeter consists of battery, resistor and PMMC.

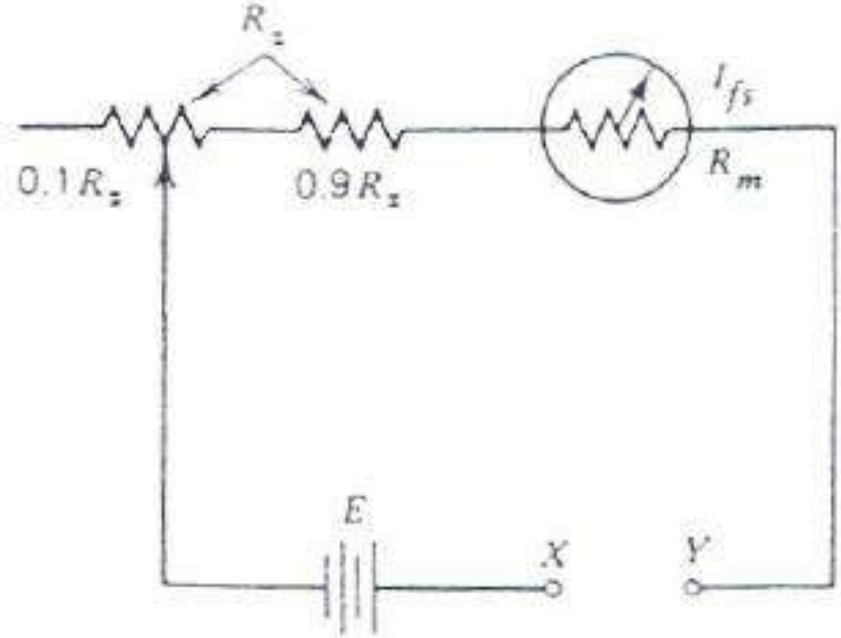

Fig. 2-7 Basic ohmmeter circuit

The full-scale deflection current,

$$I_{fs} = \frac{E}{R_Z + R_m}$$

- Function of R_z and R_m are to limit the current through the meter.

R_z = variable resistor

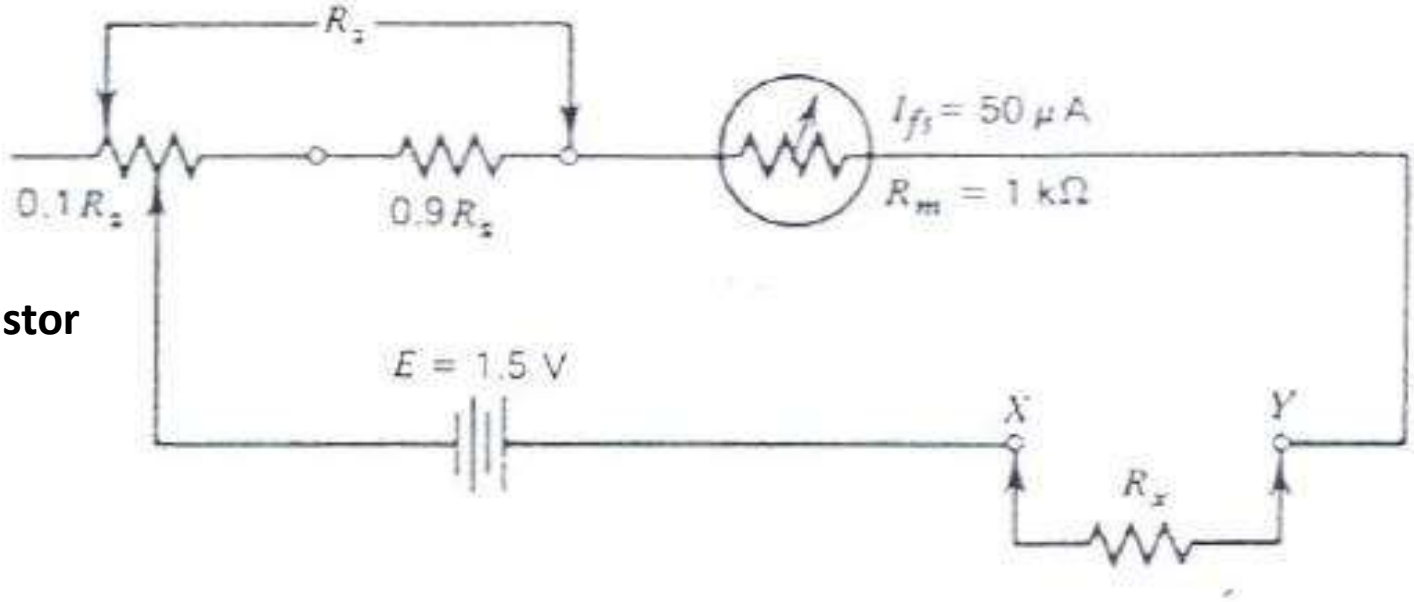

Fig. : Basic ohmmeter circuit with unknown resistor, R_x connected between probes.

To determine the value of unknown resistor, R_x, The R_x is connected to terminal X and Y. Fig. shows the basic ohmmeter circuit with unknown resistor, R_x connected between probes.

The circuit current,

$$I = \frac{E}{R_Z + R_m + R_x}$$

The ratio of the current, *I* to the full-scale deflection current, I_{fs} is

$$\frac{I}{I_{fs}} = \frac{\left(\dfrac{E}{R_Z + R_m + R_x}\right)}{\left(\dfrac{E}{R_Z + R_m}\right)} = \frac{\left(R_Z + R_m\right)}{\left(R_Z + R_m + R_x\right)}$$

Summary

- Basic d'Arsonval meter movement – current sensitive device capable of directly measuring only very small currents.
- Large currents can be measured by adding shunts.
- Voltage can be measured by adding multipliers.
- Resistance – adding battery and a resistance network.
- All ammeters & voltmeters introduce some error – meter loads the circuit (common instrumentation problem).

Moving Iron type Instruments

❖ Construction and basic principle operation

- Moving-iron **instruments** are generally used to measure alternating voltages and currents.
- In moving-iron instruments the movable system consists of one or more pieces of specially-shaped soft iron, which are so pivoted as to be acted upon by the **magnetic field** produced by the current in coil.

- **Range**: 10mA -100A
- **Usage**:

✓dc MI ammeters and voltmeters
✓ac MI ammeters and voltmeters

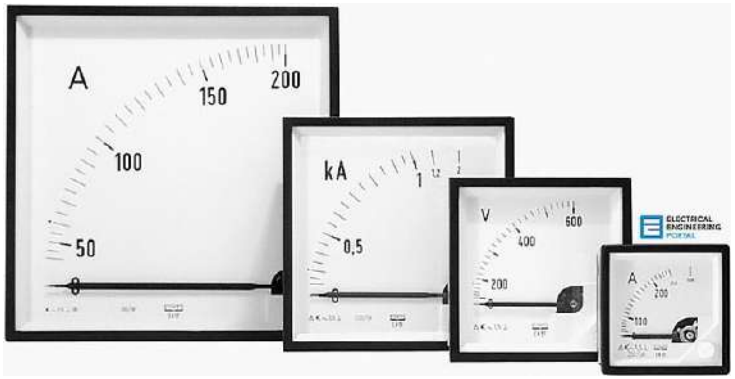

❖ There are two general types of moving-iron instruments namely:

- **Repulsion** (or double iron) type (figure 1)
- **Attraction** (or single-iron) type (figure 2)

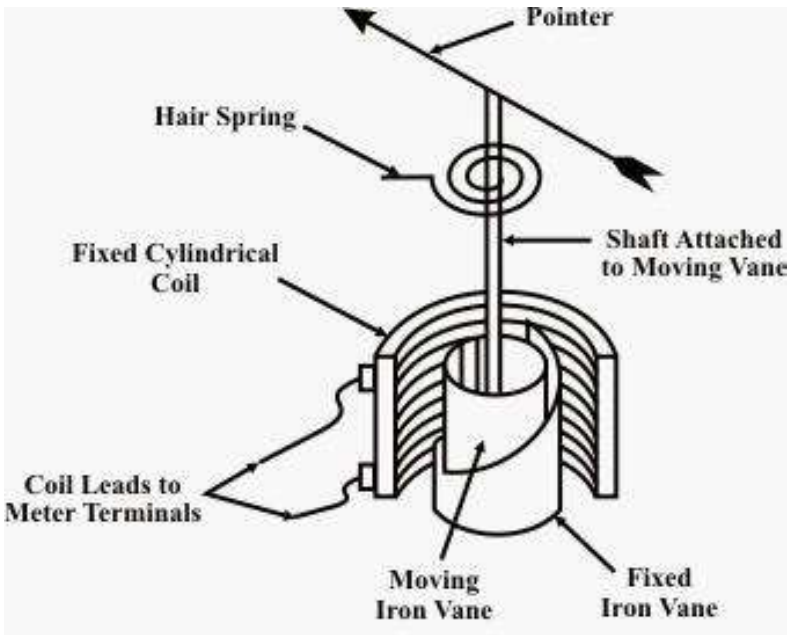

Repulsion type.

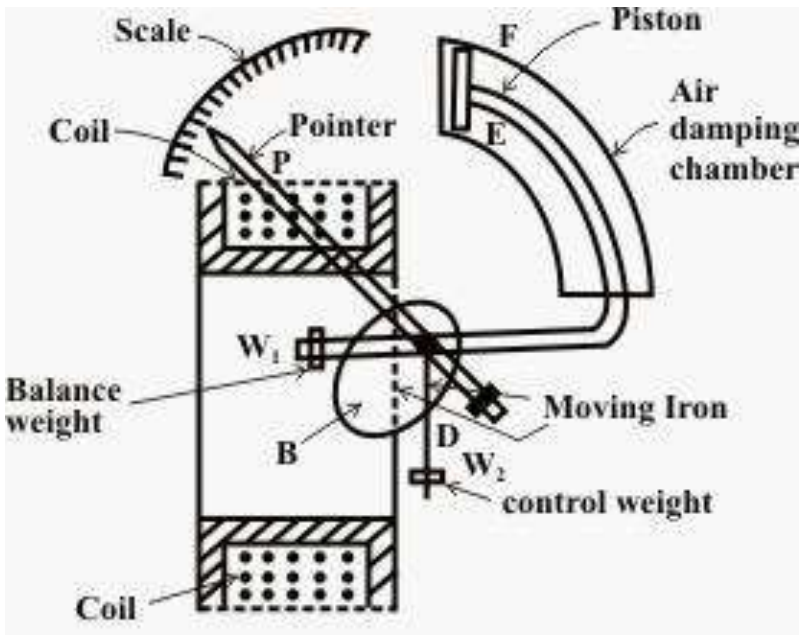

Attraction type

Moving Iron type Instruments

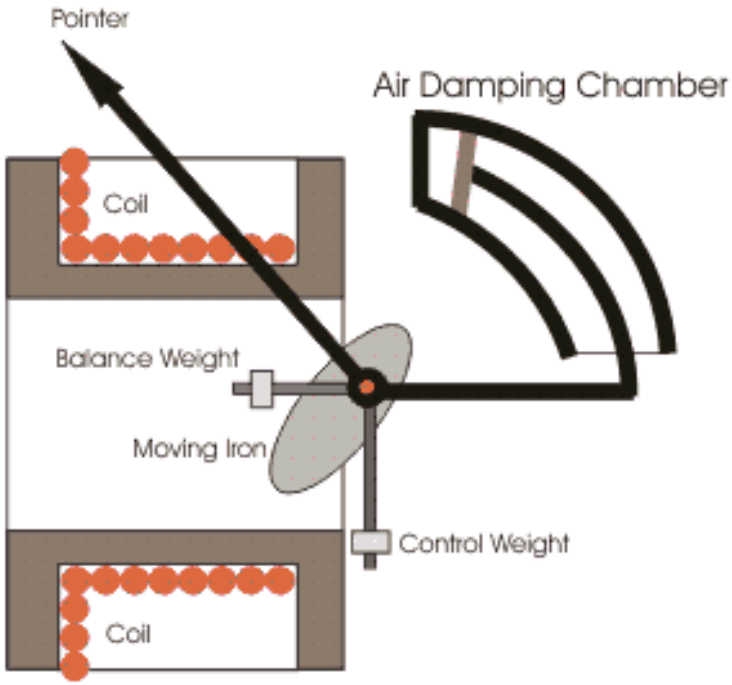

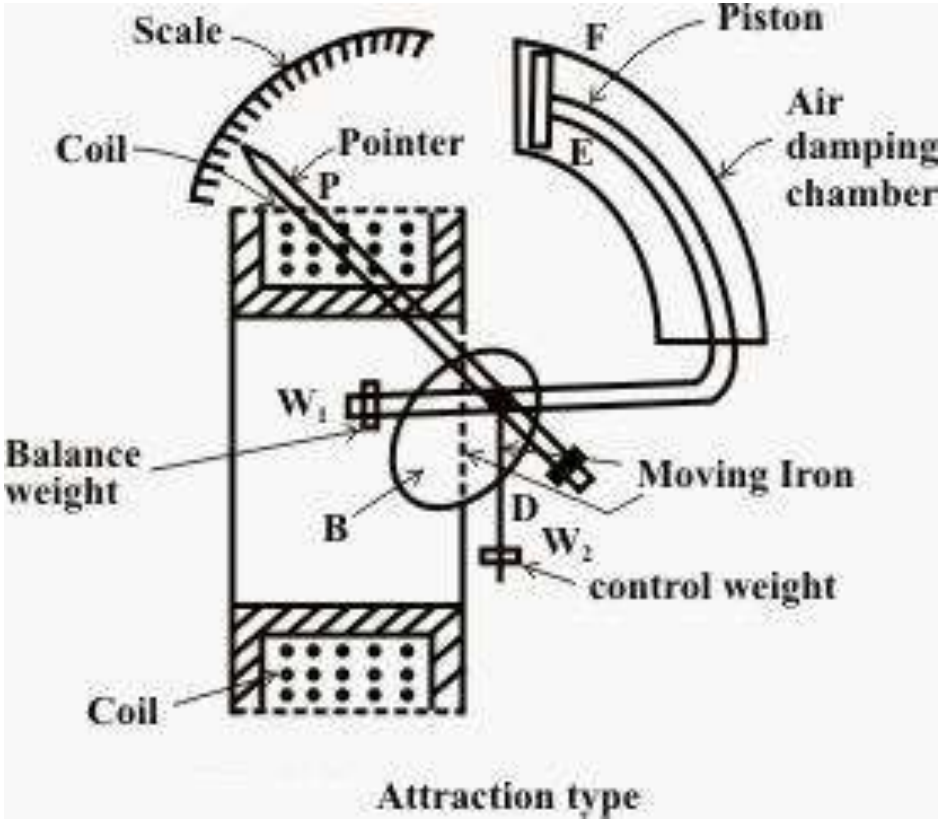

❖ The brief description of different components of a moving-iron instrument is given below:

- **Moving element:** a small piece of soft iron in the form of a vane or rod.
- **Coil:** to produce the magnetic field due to current flowing through it and also to magnetize the iron pieces.
- **In repulsion type**, a **fixed** vane or rod is also used and magnetized with the same polarity.
- **Control torque** is provided by spring or weight (gravity).
- **Damping torque** is normally pneumatic, the damping device consisting of an air chamber and a moving vane attached to the instrument spindle.
- **Deflecting torque** produces a movement on an aluminum pointer over a graduated scale.

How it works?

- The deflecting torque (T_d) in any moving-iron instrument is because of forces on a small piece of magnetically 'soft' iron that is magnetized by a coil carrying the **operating current**.
- In repulsion type moving–iron instrument consists of two cylindrical soft iron vanes mounted within a fixed current-carrying coil.

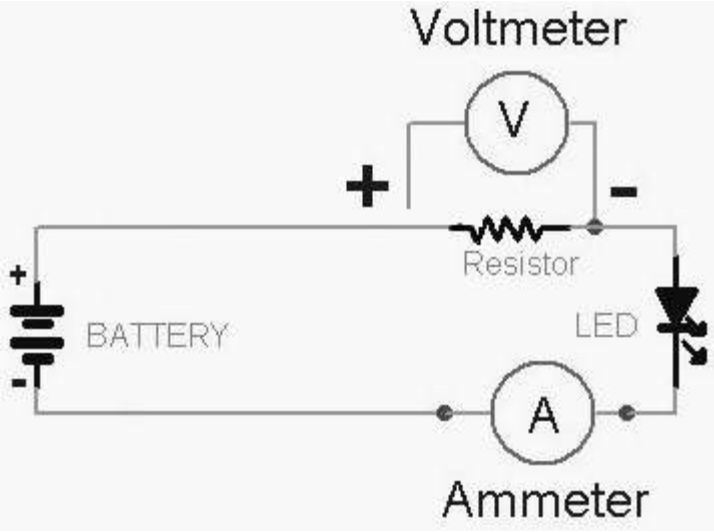

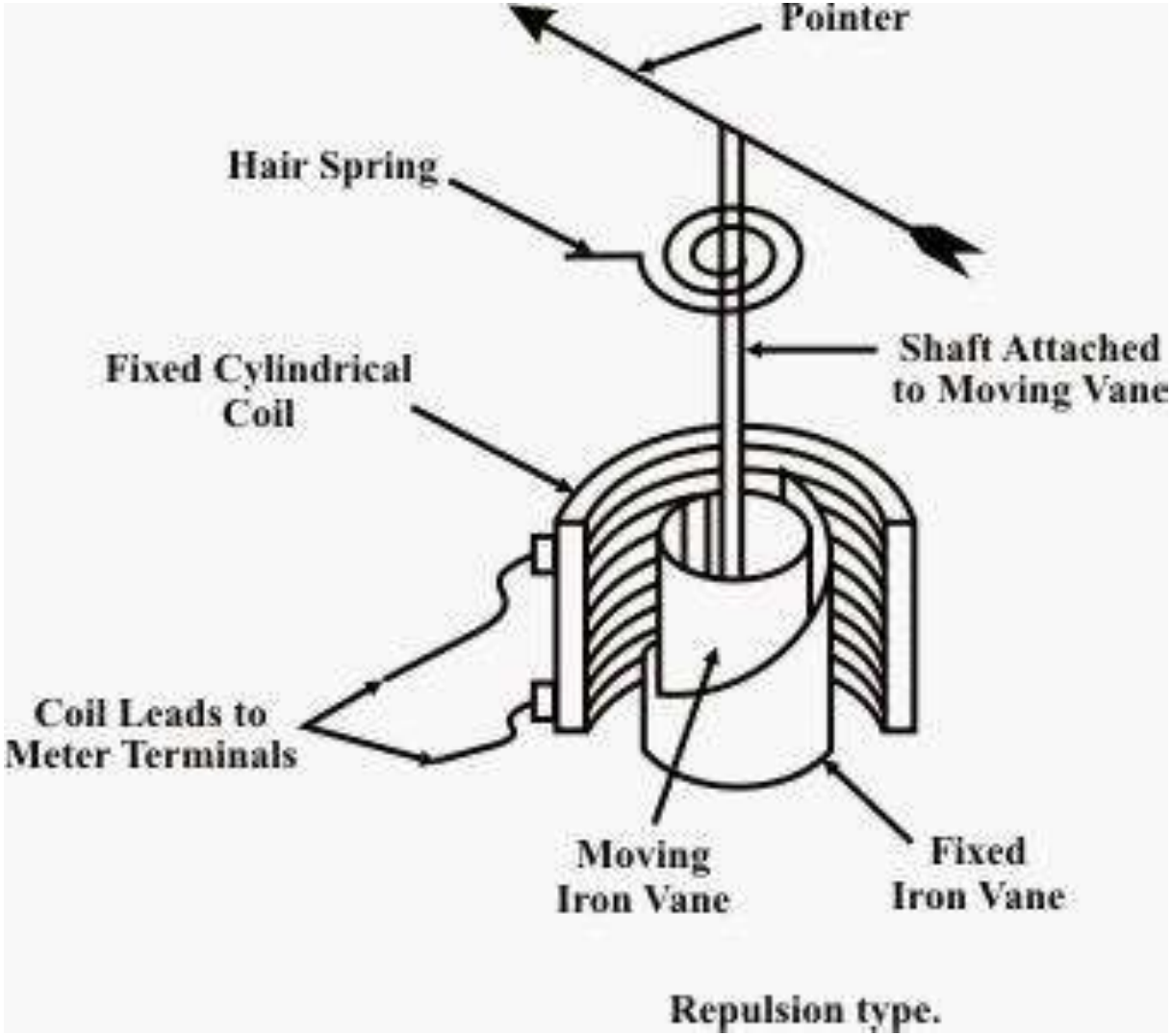

Repulsion type.

- One iron vane is held fixed to the coil frame and other is free to rotate, carrying with it the pointer shaft. Two irons lie in the magnetic field produced by the coil that consists of only few turns if the instrument is **an ammeter** or of many turns if the instrument is **a voltmeter**.
- Current in the coil induces both vanes to become magnetized and repulsion between the similarly magnetized vanes produces a proportional rotation. The **deflecting torque is proportional to the square of the current in the coil, making the instrument reading is a true 'RMS' quantity.** Rotation is opposed by a hairspring that produces the restoring torque. Only the fixed coil carries load current, and it is constructed so as to withstand high transient current.
- Limitation: Moving iron instruments having scales that are nonlinear and somewhat crowded in the lower range of calibration.

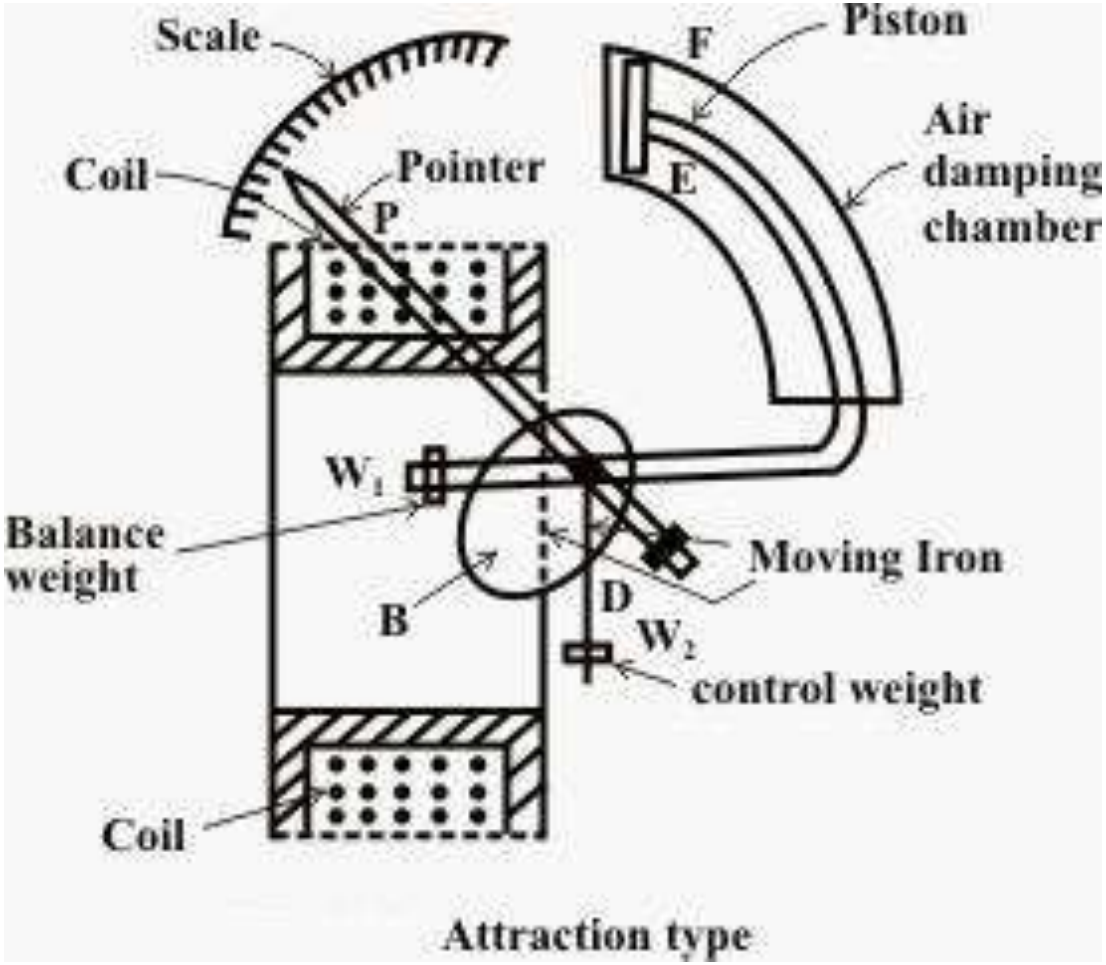
Scale
Piston
F
Air
damping
chamber
Coil
Pointer
P
E
W1
Balance
weight
Moving Iron
B
D
W2
control weight
Coil
Attraction type

Ammeter

- Instrument used to measure current in the circuit.
- Always connected in series with the circuit and carries the current to be measured.
- This current flowing through the coil produces the desired deflecting torque.
- It should have low resistance as it is to be connected in series.

Voltmeter

- Instrument used to measure voltage between two points in a circuit.
- Always connected in parallel.
- Current flowing through the operating coil of the meter produces deflecting torque.
- It should have high resistance. Thus, a high resistance of order of kilo ohms is connected in series with the coil of the instrument.

Ranges of Ammeter and Voltmeter

1. For a given moving-iron instrument the ampere-turns necessary to produce full-scale deflection are constant.
2. One can alter the range of ammeters by providing a shunt coil with the moving coil.
3. Voltmeter range may be altered connecting a resistance in series with the coil. Hence the same coil winding specification may be employed for a number of ranges.

❖ Deflecting Torque Equation of MI Instruments

Mechanical work done = torque x angular displacement

$$= T_d . d\theta$$

✓Now there will be a change in the amount of energy stored in the magnetic field because of change in Inductance.

✓Let, 'I' be the initial current; 'L' be the instrument inductance; and 'θ' is the deflection. (change in 'dI' causes change in 'dθ' and 'dL'.

Then the applied voltage must be increased by:

$$e = d\phi/dt = d(LI)/dt = I\, dL/dt + L\, dI/dt \quad (1)$$

✓ The electrical energy supplied is = e.I.dt (2) [W=P dt]

- ✓ The electrical energy supplied is = e.I.dt = I^2 dL + IL dI
- ✓ Therefore, the change in stored energy =

$$= \frac{1}{2}\left(I + dI\right)^2\left(L + dL\right) - \frac{1}{2} I^2 L$$

$$\approx IL\,dL + \frac{1}{2} I^2 L$$

(by neglecting the 2nd and higher order terms)

Therefore, the change in stored energy:

✓ From the principle of conservation of energy,

Electrical energy supplied = increase in stored energy + mechanical work done

$$I^2 dL + IL\,dI = ILdI + \frac{1}{2} I^2 dL + T_d\, d\theta$$

$$\therefore \frac{1}{2} I^2 dL = T_d\, d\theta$$

$$\Rightarrow T_d = \frac{1}{2} I^2 \frac{dL}{d\theta} \quad (N-m)$$

❖Control Torque Equation of MI Instruments

$$T_c = k_s d\theta$$

- **At steady state condition;**

$$k_s\theta = \frac{1}{2} I^2 \frac{dL}{d\theta}$$

$$\therefore \theta = \frac{1}{2} \frac{I^2}{k_s} \frac{dL}{d\theta}$$

$$\Rightarrow \theta \ \alpha \ I^2$$

So, MI instruments are able to read True *rms value* of the operating current.

Benefits

- The instruments are suitable for use in AC and DC circuits.
- The instruments are robust, owing to the simple construction of the moving parts.
- The stationary parts of the instruments are also simple.
- Instrument is low cost compared to moving coil instrument.
- Torque/weight ratio is high, thus less frictional error.

Limitations

- Error due to variation in temperature.
- Error due to friction is quite small as torque-weight ratio is high in moving coil instruments.
- Stray fields cause relatively low values of magnetizing force produced by the coil. Efficient magnetic screening is essential to reduce this effect.
- Error due to variation of frequency causes change of reactance of the coil and also changes the eddy currents induced in neighboring metal.
- Deflecting torque is not exactly proportional to the square of the current due to non-linear characteristics of iron material (I^2R loss).

Electrodynamometer
(Electrodynamics) Type Instruments

❖ Problem with other measuring instruments

- The necessity for the a.c. calibration of moving iron instruments as well as other types of instruments, which cannot be correctly calibrated, **requires the use of a transfer type of instrument**.
- A **transfer instrument** is one that may be calibrated with a d.c. Source and then used without modification to measure a.c.
- This requires the transfer type instrument to have the same accuracy for both d.c. and a.c., which the electrodynamometer instruments have.
- These standards are precision resistors and the Weston standard cell (which is a d.c. cell).
- It is obvious, therefore, that it would be impossible to calibrate an a.c. instrument directly against the fundamental standards.

❖ The calibration of an a.c. instrument may be performed as follows.

- The transfer instrument is first calibrated on d.c.
- This calibration is then transferred to the a.c. instrument on alternating current, using operating conditions under which the latter operates properly.
- Electrodynamics instruments are capable of service as transfer instruments.
- Indeed, their principal use as ammeters and voltmeters in laboratory and measurement work is for the transfer calibration of working instruments and as standards for calibration of other instruments as their accuracy is very high.

- Electrodynamometer types of instruments are used as a.c. voltmeters and ammeters both in the range of power frequencies and lower part of the audio power frequency range. They are used as wattmeters, voltmeters and with some modification as power factor meters and frequency meters.

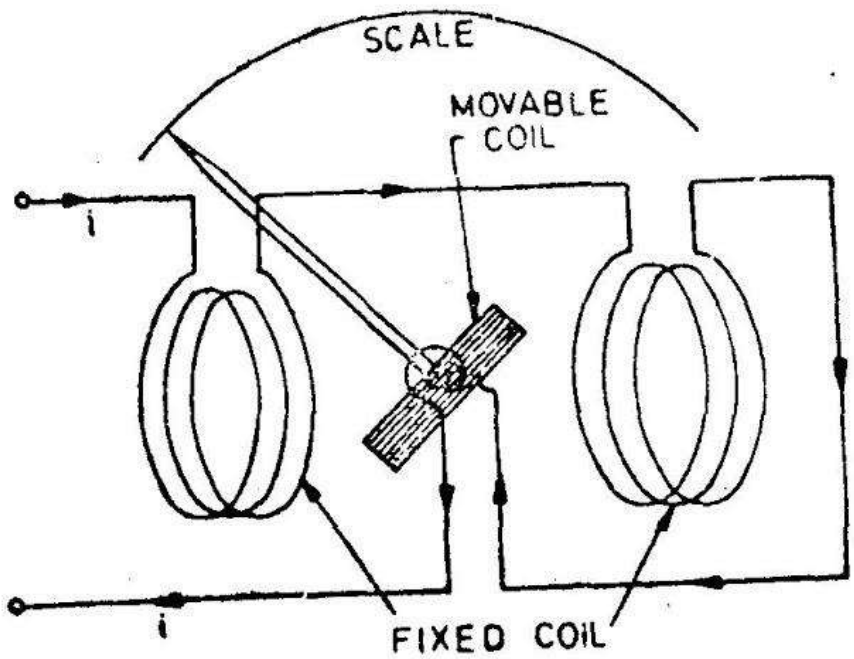

Electrodynamometer
(Electrodynamics) Type Instruments

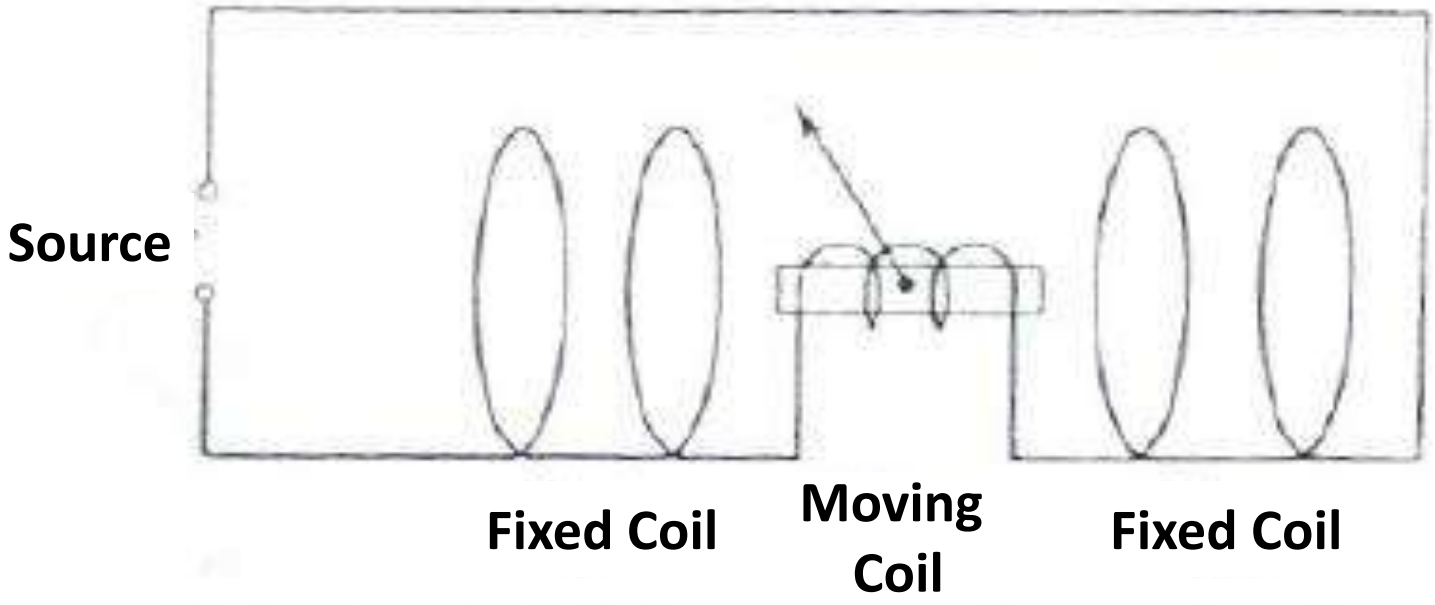

❖ Most fundamental and versatile meter use today.

- is a current-sensitive device – the pointer deflects up scale because of current flow through moving coil.
- Most important applications: voltmeter and ammeter standard.

- The single-coil electrodynamometer movement consists of a fixed coil divided into two equal halves.
- Both halves of the split fixed coil and the moving coil are connected in series – current from the circuit being measured passed through all the coils causing magnetic field around the fixed coils. The moving coil rotates in this magnetic field.
- The electrodynamometer – handle much more current than d' Arsonval movement. It can handle ~ 100mA.
- The electrodynamometer – have a very low sensitivity rating of ~ 20 to 100 Ω/V.
- Most extensive application: Wattmeter and power factor meter.
- The magnetic torque that cause pointer deflect up scale:

$$\theta_m = K_m E I \cos\theta$$

Θ_m – angular deflection of the pointer
K_m – instrument constant (degrees/watt)
cos θ – power factor
E – rms value of source voltage
I – rms value of source current

Operating Principle

- It would have a torque in one direction during one half of the cycle and an equal effect in the opposite direction during the other half of the cycle.

- If the frequency were very low, the pointer would swing back and forth around the zero point.

- However, for an ordinary meter, the inertia is so great that on power frequencies the pointer does not go very far in either direction but merely stays (vibrates slightly) around zero.

- If, however, we were to reverse the direction of the flux each time the current through the movable coil reverses, a unidirectional torque would be produced for both positive and negative halves of the cycle.

- In electrodynamometer instruments the field can be made to reverse simultaneously with the current in the movable coil if the field (fixed) coil is connected in series with the movable coil.

Construction

Fixed Coils

- The field is produced by a fixed coil.
- This coil is divided into two sections to give a more uniform field near the centre and to allow passage of the instrument shaft.

Moving Coil

- A single element instrument has one moving coil.
- The moving coil is wound either as a self-sustaining coil or else on a non-metallic former.
- A metallic former cannot be used as eddy current would be induced in it by the alternating field.
- Light but rigid construction is used for the moving coil.
- It should be noted that both fixed and moving coils are air cored.

Control

- The controlling torque is provided by two control springs.
- These springs act as leads to the moving coil.

Moving System

- The moving coil is mounted on an aluminum spindle.
- The moving system also carries the counter weights and truss type pointer.
- Sometimes a suspension may be used in case a high sensitivity is desired.

Damping

- Air friction damping is employed for these instruments and is provided by a pair of aluminum vanes, attached to the spindle at the bottom.
- These vanes move in sector shaped chambers.
- Eddy current damping cannot be used in these instruments as the operating field is very weak (on account of the fact that the coils are air cored) and any introduction of a permanent magnet required for eddy current damping would distort the operating magnetic field of the instrument.

Shielding

- The field produced by the fixed coils is somewhat weaker than in other types of instruments
- It is nearly 0.005 to 0.006 Wb/m
- In D.C. Measurements even the earth magnetic field may affect the readings.
- Thus it is necessary to shield an electrodynamometer type instrument from the effect of stray magnetic fields.
- Air cored electrodynamometer type instruments are protected against external magnetic fields by enclosing them in a casing of high permeability alloy.
- This shunts external magnetic fields around the instrument mechanism and minimizes their effects on the indication.

Cases and Scales

- Laboratory standard instruments are usually contained in highly polished wooden cases.
- These cases are so constructed as to remain dimensionally stable over long periods of time.
- The glass is coated with some conducting material to completely remove the electrostatic effects.
- Adjustable leveling screws support the case.
- A spirit level is also provided to ensure proper leveling.
- The scales are hand drawn, using machine sub-dividing equipment.
- Diagonal lines for fine sub-division are usually drawn for main markings on the scale.
- Most of the high-precision instruments have a 300 mr scale with 100, 120 or 150 divisions

Torque Equation

Let, i1 = instantaneous value of current in the fixed coils: A.

i2 = instantaneous value of current in the moving coil: A.

L1 = self-inductance of fixed coils: H.

L2 = self-inductance of moving coils H,

M = mutual inductance between fixed and moving coils:

Flux linkages of coil 1, $\psi_1 = L_1 i_1 + Mi_2$

Flux linkages f coil 2, $\psi_2 = L_2 i_2 + Mi_1$

Electrical input energy $= e_1 i_1 dt + e_2 i_2 dt$

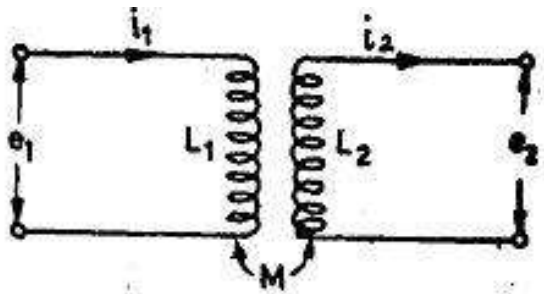

(Fig) circuit representation

$$= i_1L_1di_1 + i_1^2dL_1 + i_1i_2dM + i_1Mdi_2 + i_2L_2di_2 + i_2^2dL_2 + i_1i_2dM + i_2Mdi_1$$

Energy stored in the magnetic field $= \frac{1}{2}i_1^2L_1 + \frac{1}{2}i_2^2L_2 + i_1i_2M$

Change in energy stored $= d(\frac{1}{2}i_1^2L_1 + \frac{1}{2}i_2^2L_2 + i_1i_2M)$

$$= i_1L_1di_1 + (i_1^2/2)dL_1 + i_2L_2di_2 + (i_2^2/2)dL_2 + i_1Mdi_2 + i_2Mdi_1 + i_1i_2dM$$

From principle of conservation of energy,

Total electrical input energy = change in energy stored + mechanical energy.

$\therefore$ Mechanical energy $= \frac{1}{2}i_1^2dL_1 + \frac{1}{2}i_2^2dL_2 + i_1i_2dM.$

Now the self-inductances L and L are constant and therefore dL and dL are both equal to zero. Thus we have

$$T_i d\theta = i_1 i_2 dM \text{ or } T_i = i_1 i_2 \, dM/d\theta$$

Errors in Electrodynamometer Instruments

i) Frequency error

ii) Eddy current error

iii) External magnetic field

iv) Temperature changes

Advantages

i) These instruments can be used on both a.c & d.c

ii) Accurate rms value

Disadvantages

(i) They have a low torque/weight ratio and hence have a low sensitivity.

(ii) Low torque/weight ratio gives increased frictional losses.

(iii) They are more expensive than either the PMMC or the moving iron type instruments.

(iv) These instruments are sensitive to overloads and mechanical impacts. Therefore, they must be handled with great care.

(v) The operating current of these instruments is large owing to the fact that they have weak magnetic field. The flux density is about 0.006 Wb/m as against 0.1 to 0.5 Wb/m in PMCC instruments

(vi) They have a non-uniform scale.

1. Operation with dc Let, I_1 = current in the fixed coils, I_2 = current in the moving coil

So deflecting torque $T_d = I_1 I_2 \frac{dM}{d\theta}$. This shows that the deflecting torque depends in general on the product of current I_1 and I_2 and the rate of change of mutual inductance.

This deflecting torque deflects the moving coil to such a position where the controlling torque of the spring is equal to the deflecting torque. Suppose θ be the final steady deflection.

Therefore controlling torque $T_c = k\theta$; where k = spring constant (N-m/rad)

At final steady position $T_d = T_c$

$$I_1 I_2 \frac{dM}{d\theta} = k\theta$$

or, the deflection $$\boxed{\theta = \frac{I_1 I_2}{k}\frac{dM}{d\theta}} \quad (2.37)$$

If the two coils are connected in series for measurement of current, the two currents I_1 and I_2 are equal.

Say, $$I_1 = I_2 = I$$

Thus, deflection of the pointer is $\theta = \frac{I^2}{k}\frac{dM}{d\theta}$

For dc use, the deflection is thus proportional to square of the current and hence the scale non-uniform and crowded at the ends.

2. Operation with ac Let, i_1 and i_2 be the instantaneous values of current carried by the coils. Therefore, the instantaneous deflecting torque is:

$$T_i = i_1 i_2 \frac{dM}{d\theta}$$

If the two coils are connected in series for measurement of current, the two instantaneous currents i_1 and i_2 are equal.

Say, $i_1 = i_2 = i$ **; Note: treat here i_2 as i^2**

Thus, instantaneous torque on the pointer is $T_i = i_2 \frac{dM}{d\theta}$

Thus, for ac use, the instantaneous torque is proportional to the square of the instantaneous current. As the quantity i^2 is always positive, the current varies and the instantaneous torque also varies. But the moving system due to its inertia cannot follow such rapid variations in the instantaneous torque and responds only to the average torque.

The average deflecting torque over a complete cycle is given by:

$$T_d = \frac{1}{T}\int_0^T T_i \, dt = \frac{dM}{d\theta}\frac{1}{T}\int_0^T i^2 \, dt$$

where T is the time period for one complete cycle.

At final steady position $T_d = T_c$

or, $$k\theta = \frac{dM}{d\theta}\frac{1}{T}\int_0^T i^2\,dt$$

Thus, deflection of the pointer is $\theta = \frac{1}{k}\frac{dM}{d\theta}\frac{1}{T}\int_0^T i^2\,dt$

Deflection is thus a function of the mean of the square of the current. If the pointer scale is calibrated in terms of square root of this value, i.e. square **root** of the **mean** of the **square** of current value, then rms value of the ac quantity can be directly measured by this instrument.

3. Sinusoidal Current If currents i_1 and i_2 are sinusoidal and are displaced by a phase angle φ, i.e.

$$i_1 = i_{m1} \sin \omega t \quad \text{and} \quad i_2 = I_{m2} \sin(\omega t - \varphi)$$

$\therefore$ The average deflecting torque

$$T_d = \frac{dM}{d\theta} \frac{1}{T} \int_0^T i_1 i_2 \, dt = \frac{dM}{d\theta} \frac{1}{2\pi} \int_0^{2\pi} I_{m1} \sin \omega t \cdot I_{m2} \sin(\theta t - \varphi) \, d\omega t$$

$$\frac{I_{m1} I_{m2}}{2} \cos \varphi \frac{dM}{d\theta} = I_1 I_2 \cos \varphi \frac{dM}{2\theta}$$

where I_1 and I_2 are the rms values of the currents flowing through the coils.

At equilibrium, $T_d = T_c$

or

$$I_1 I_2 \cos \varphi \frac{dM}{d\theta} = k\theta \tag{2.38}$$

$$\therefore \quad \boxed{\theta = \frac{I_1 I_2}{k} \cos \varphi \frac{dM}{d\theta}}$$

As was in the case with ac measurement, with sinusoidal current also the deflection is a function of the mean of the square of the current. If the pointer scale is calibrated in terms of square root of this value, i.e. square **root** of the **mean** of the **square** of current value, then RMS value of the ac quantity can be directly measured by this instrument.

1. Electrodynamic Ammeter In an electrodynamic ammeter, the fixed and moving coils are connected in series as shown in Figure 2.17. A shunt is connected across the moving coil for limiting the current. The reactance–resistance ratio of the shunt and the moving coil is kept nearly same for independence of the meter reading with the supply frequency. Since the coil currents are the same, the deflecting torque is proportional to the mean square value of the current. Thus, the scale is calibrated to read the rms value.

Analog Meters

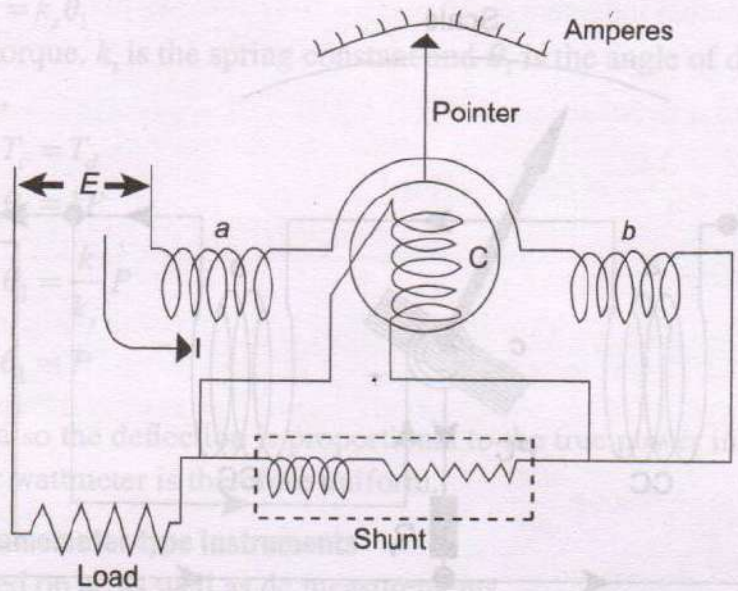

Figure 2.17 *Electrodynamometer ammeter*

2. Electrodynamic Voltmeter The electrodynamic instrument can be used as a voltmeter by connecting a large noninductive resistance (R) of low temperature coefficient in series with the instrument coil as shown in Figure 2.18.

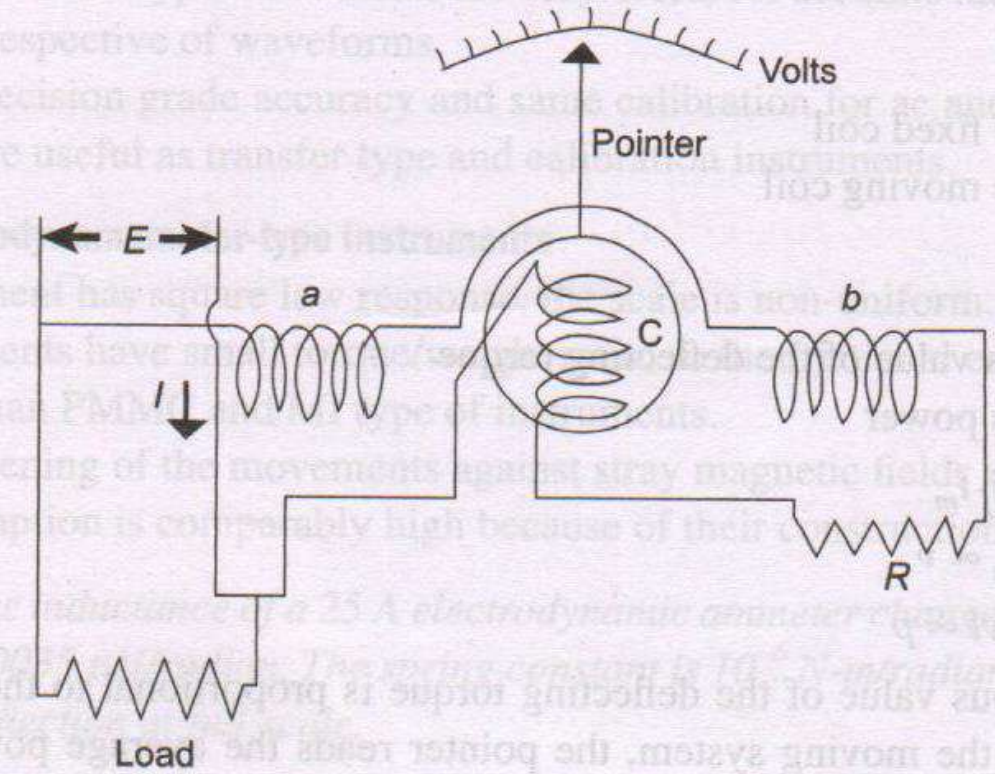

Figure 2.18 *Electrodynamometer voltmeter*

3. Electrodynamic Wattmeter The electrodynamic wattmeter consist of two fixed coils '*a*' and '*b*' placed symmetrical to each other and producing a uniform magnetic field. They are connected in series with the load and are called the Current Coils (CC). The two fixed coils can be connected in series or parallel to give two different current ratings. The current coils carry the full-load current or a fraction of full load current. Thus the current in the current coils is proportional to the load current. The moving coil '*c*', in series with a high non inductive resistance R_v is connected across the supply. Thus the current flowing in the moving coil is proportional to, and practically in phase with the supply voltage. The moving coil is also called the voltage coil or Pressure Coil (PC). The voltage coil is carried on a pivoted spindle which carries the pointer, the pointer moved over a calibrated scale.

Two hair springs are used for providing the controlling torque and for leading current into and out of the moving coil. Damping is provided by air friction. Figure 2.20 shows the basic arrangement of a electrodynamic wattmeter.

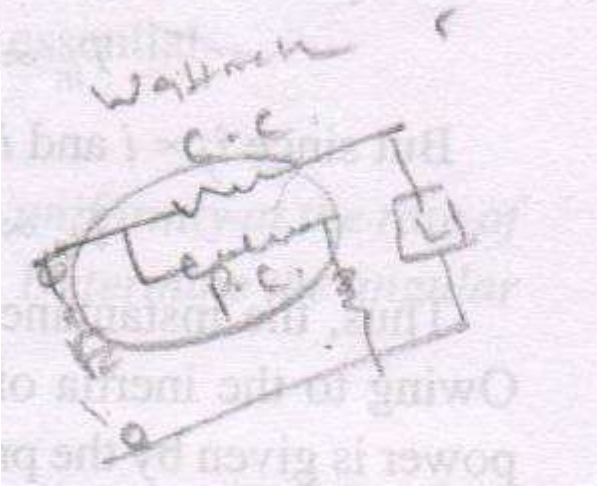

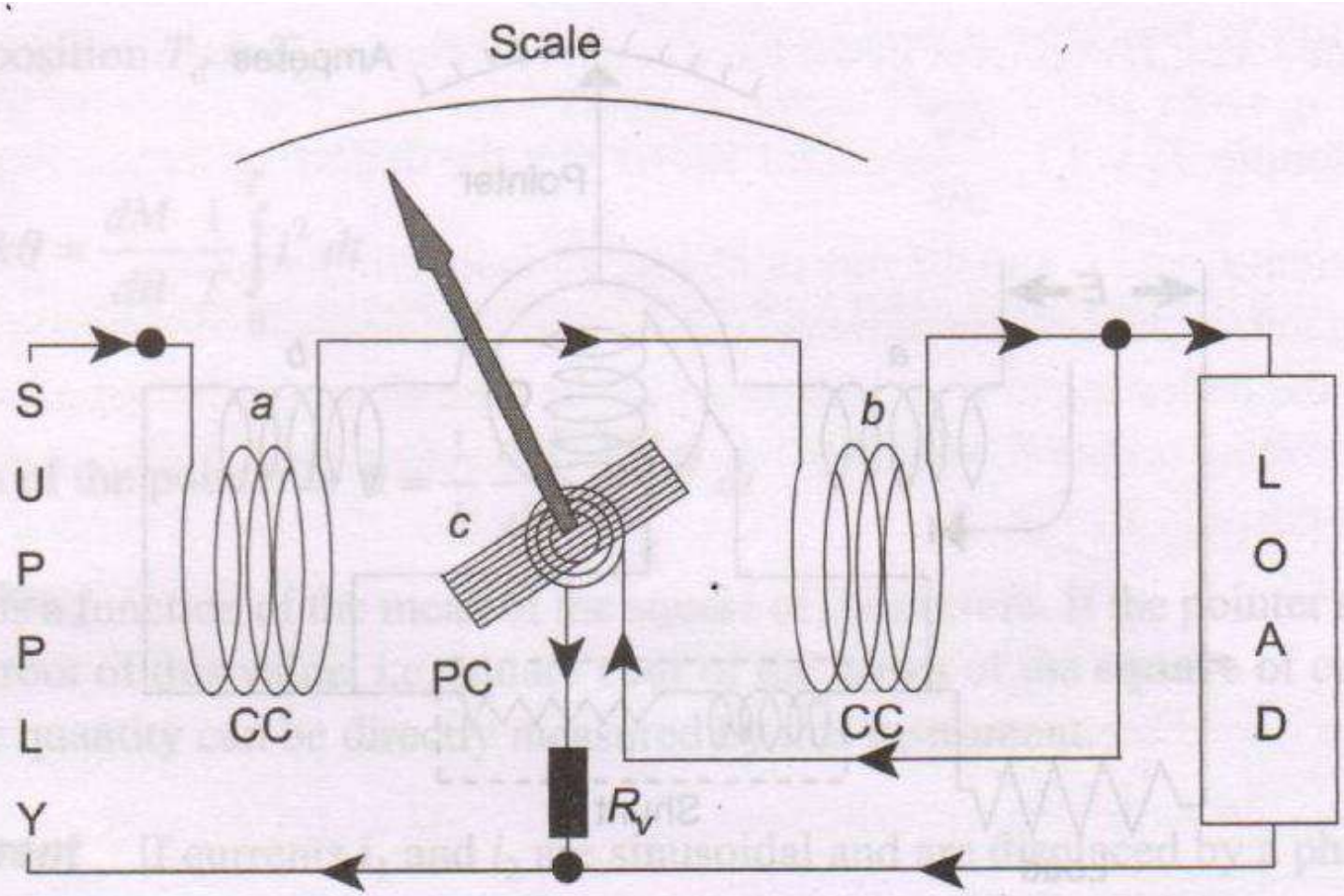

Figure 2.19 *Electrodynamic wattmeter*

4. Torque Equation

Let, i_f = current in the fixed coil

i_m = current in the moving coil

i = load current

v = load voltage

T_{in} = instantaneous value of the deflecting torque

p = instantaneous power

$$T_{in} \propto i_f i_m \tag{2.39}$$

But since $i_f \propto i$ and $i_m \propto v$

$$T_{in} \propto vi \propto p \tag{2.40}$$

Thus, the instantaneous value of the deflecting torque is proportional to the instantaneous power. Owing to the inertia of the moving system, the pointer reads the average power. In dc circuits, the power is given by the product of voltage and current, and hence the torque is directly proportional to the power. Thus, the instrument indicates the power.

For ac, the instrument indicates the average power. This can be proved as follows:

$$T_{in} \propto vi$$

Average deflecting torque $\propto$ average power

Let, $v = V_m \sin\theta$

$$I = I_m \sin(\theta - \Phi)$$

Average deflecting torque $\propto$ average value of $V_m \sin\theta \times I_m \sin(\theta - \Phi) \propto VI\cos\theta$

If T_d be the average torque, then

$$T_d \propto VI\cos\Phi \propto \text{true power} = kP \tag{2.41}$$

where P is the true power and k is the constant.

For spring control $T_c = k_s\theta_1$

where T_c is the control torque, k_s is the spring constant and θ_1 is the angle of deflection of the pointer.

For steady deflection,

$$T_c = T_d$$

$$k_s\theta_1 = kP$$

$$\theta_1 = \frac{k}{k_s}P$$

$$\theta_1 \propto P$$

Hence, in case of ac also the deflection is proportional to the true power in the circuit. The scale of the electrodynamometer wattmeter is therefore uniform.

Electrostatic Instruments

In electrostatic instruments, the deflecting torque is produced by action of electric field on charged conductors. Such instruments are essentially voltmeters, but they may be used with the help of external components to measure the current and power. Their greatest use in the laboratory is for measurement of high voltages.

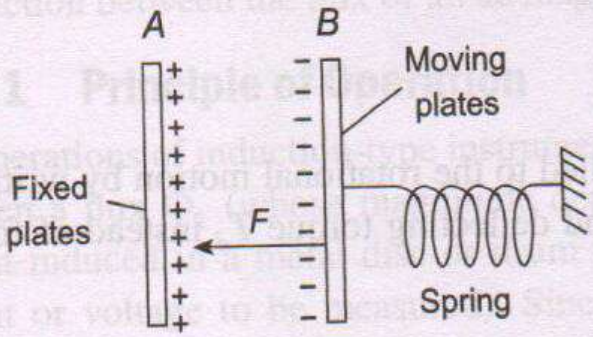

Figure 2.20 *Linear motion of electrostatic instruments*

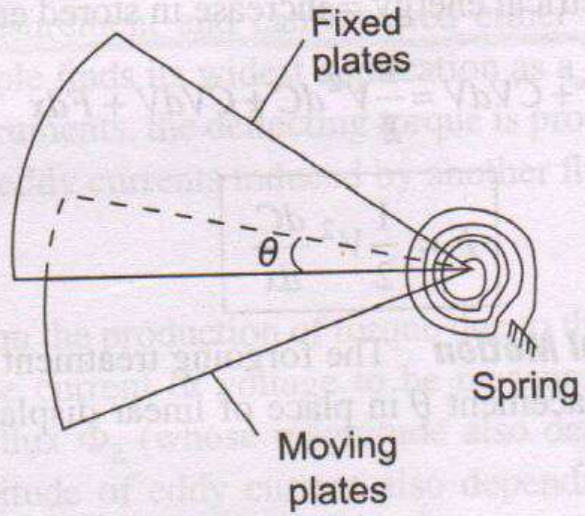

Figure 2.21 *Rotary motion of electrostatic instruments*

There are two ways in which the force acts:

1. One type involves two oppositely charged electrodes. One of them is fixed and the other is movable. Due to force of attraction, the movable electrode is drawn towards the fixed one.
2. In the other type, there is force of attraction or repulsion between the electrodes which causes rotary motion of the moving electrode.

In both the cases, the mechanism resembles a variable capacitor and the force or torque is due to the fact that the mechanism tends to move the moving electrode to such a position where the energy stored is maximum.

2.10.1 Force and Torque Equation

1. Linear Motion Referring to Figure 2.20, plate A is fixed and B is movable. The plates are oppositely charged and are restrained by a spring connected to the fixed point. Let a potential difference of V volt be applied to the plates; then a force of attraction F Newton exists between them. Plate B moves towards A until the force is balanced by the spring. The capacitance between the plates is then C farad and the stored energy is $\frac{1}{2}CV^2$ joules.

$$i = \frac{dq}{dt} = \frac{d}{dt}(CV) = C\frac{dV}{dt} + V\frac{dC}{dt}$$

The input energy is $Vidt = V^2 dC + CVdV$

$$\text{Change in stored energy} = \frac{1}{2}(C + dC)(V + dV)^2 - \frac{1}{2}CV^2$$

$$= \frac{1}{2}V^2 dC + CVdV$$

(neglecting the higher order terms as they are small quantities)

From the principle of conservation of energy,

Input electrical energy = increase in stored energy + mechanical work done

$$V^2 dC + CVdV = \frac{1}{2}V^2 dC + CVdV + Fdx$$

$$\therefore \quad \boxed{F = \frac{1}{2}V^2 \frac{dC}{dx}}$$

2. Rotational Motion The forgoing treatment can be applied to the rotational motion by writing an angular displacement θ in place of linear displacement x and deflecting torque T_d instead of force F (Figure 2.21).

Deflecting torque $T_d = \frac{1}{2} V^2 \frac{dC}{d\theta}$ (2.46)

If the instrument is spring controlled or has a suspension then

Controlling torque $T_c = k\theta$; where k = spring constant

θ = deflection

Hence, deflection

$$\boxed{\theta = \frac{1}{2} \frac{V^2}{k} \frac{dC}{d\theta}} \quad (2.47)$$

Since the deflection is proportional to the square of the voltage to be measured, the instrument can be used on both ac and dc. The instrument exhibits a square law response and hence the scale is non-uniform.

Advantages of Electrostatic Instruments

1. These instruments draws negligible amount of power from the mains.
2. They may be used on both ac and dc.
3. They have no frequency and waveform errors as the deflection is proportional to square of voltage and there is no hysteresis.
4. There are no errors caused by the stray magnetic field as the instrument works on the electrostatic principle.
5. They are particularly suited for high voltage.

Disadvantages of Electrostatic Instruments

1. The use of electrostatic instruments is limited to certain special applications, particularly in ac circuits of relatively high voltage, where the current drawn by other instruments would result in erroneous indication. A protective resistor is generally used in series with the instrument in order to limit the current in case of a short circuit between plates.
2. These instruments are expensive, large in size and are not robust in construction.
3. Their scale is not uniform.
4. The operating force is small.

Induction Type Instruments

Induction-type instruments are used only for ac measurement and can be used either as ammeter, voltmeter or wattmeter. However, the induction principle finds its widest application as a watt-hour or energy meter (for details, refer Chapter 8). In such instruments, the deflecting torque is produced due to the reaction between the flux of an ac magnet and the eddy currents induced by another flux.

2.11.1 Principle of Operation

The operations of induction-type instruments depend on the production of torque due to the interaction between a flux Φ_1 (whose magnitude depends on the current or voltage to be measured) and eddy current induced in a metal disc or drum by another flux Φ_2 (whose magnitude also depends on the current or voltage to be measured). Since the magnitude of eddy current also depends on the flux producing them, the instantaneous value of the torque is proportional to the square of current or voltage under measurement and the value of mean torque is proportional to the mean square value of this current or voltage.

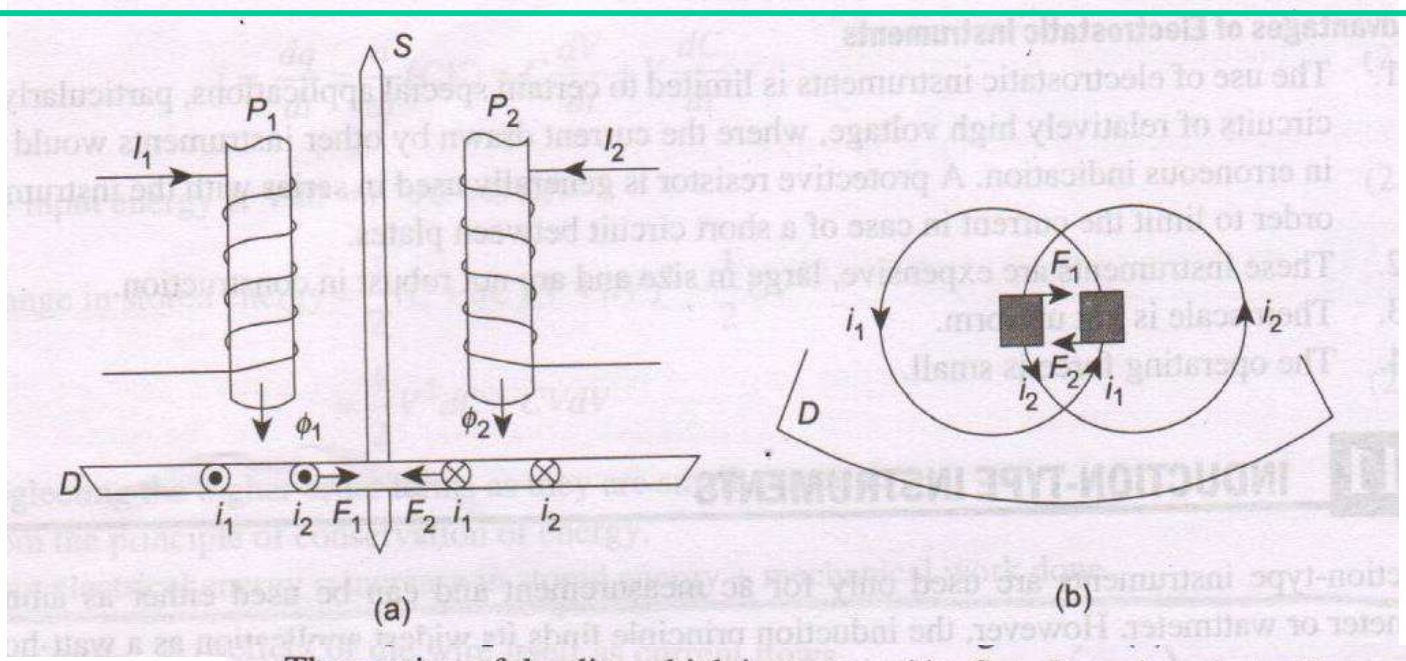

The portion of the disc which is traversed by flux Φ_1 and carries eddy currents i_2 experiences a force F_1 along the direction as indicated. As $F = Bil$, force $F_1 \propto \Phi_1 i_2$. Similarly, the portion of the disc lying under flux Φ_2 and carrying eddy current i_1 experiences a force $F_2 \propto \Phi_2 i_1$.

$$\therefore \quad F_1 \propto \varphi_1 i_2 = k\varphi_1 i_2 \tag{2.48}$$

$$F_2 \propto \varphi_2 i_1 = k\varphi_2 i_1 \tag{2.49}$$

It is assumed that the constant k is the same in both the cases due to the symmetrical position of P_1 and P_2 with respect to the disc.

If r be the effective radius at which these forces acts, then net instantaneous torque T acting on the disc being equal to the different of the two torques, it is given by

$$T = r(k\varphi_1 i_2 - k\varphi_2 i_1) = k_1(\varphi_1 i_2 - \varphi_2 i_1) \tag{2.50}$$

Let the alternating flux φ_1 be given by $\varphi_1 = \varphi_{1m} \sin \omega t$. The flux φ_2 which is assumed to lag φ_1 by an angle α radian is given by $\varphi_2 = \varphi_{2m} \sin(\omega t - \alpha)$

Induced emf $e_1 = \dfrac{d\varphi_1}{dt} = \dfrac{d}{dt}(\varphi_{1m} \sin \omega t) = \omega \varphi_{1m} \cos \omega t$

Assuming the eddy current path to be purely resistive and of value R, then the value of eddy current is

$$i_1 = \frac{e_1}{R} = \frac{\omega \varphi_{1m}}{R} \cos \omega t$$

Similarly, $e_2 = \omega \varphi_{2m} \cos(\omega t - \alpha)$ and $i_2 = \dfrac{e_2}{R} = \dfrac{\omega \varphi 2m}{R} \cos(\omega t - \alpha)$

Substituting these values of i_1 and i_2 in Eq. (2.48), we get

$$T = \frac{k_1\omega}{R}\left[\varphi_{1m}\sin\omega t\cdot\varphi_{2m}\cos(\omega t-\alpha)-\varphi_{2m}\sin(\omega t-\alpha)\cdot\varphi_{1m}\cos\omega t\right]$$

$$= \frac{k_1\omega}{R}\varphi_{1m}\varphi_{2m}\left[\sin\omega t\cdot\cos(\omega t-\alpha)-\sin(\omega t-\alpha)\cdot\cos\omega t\right]$$

$$= \frac{k_1\omega}{R}\varphi_{1m}\varphi_{2m}\sin\alpha = k_2\omega\varphi_{1m}\varphi_{2m}\sin\alpha \qquad \left[\text{putting } \frac{k_1}{R}=k_2\right] \tag{2.51}$$

The following is observed:

1. If $\alpha = 0$, i.e., if two fluxes are in phase, then net torque is zero. If, on the other hand, $\alpha = 90°$, the net torque is maximum for a given values of φ_{1m} and φ_{2m}.
2. The net torque is such a direction as to rotate the disc from the pole with leading flux, towards the pole with lagging flux.
3. Since the expression for torque does not involve t, it is independent of time, i.e., it has a steady value at all times.
4. The torque T is inversely proportional to R; the resistance of the eddy current path. Hence, it is made of copper or more often, of aluminium.

Electro-thermal Instruments

Mainly there are two types of thermal instruments:

- Hot-wire type → current
- Thermocouple instrument → temp, f = n/p/v/I

Hot-wire and thermocouple meter movements use the heating effect of current flowing through a resistance to cause meter deflection. Each uses this effect in a different manner. Since their operation depend only on the heating effect of current flow, they may be used to measure both direct and alternating currents of any frequency on a single scale.

2.12.1 Hot-wire Instrument

The hot-wire meter movement deflection depends on the expansion of a high resistance wire caused by the heating effect of the wire itself as current flows through it. A resistance wire is stretched between the two meter terminals, with a thread attached at a right angles to the centre of the wire. A spring connected to the opposite end of the thread exerts a constant tension on the resistance wire. Current flow heats the wire, causing it to expand. This motion is transferred to the meter pointer through the thread and a pivot. Figure 2.23 shows the basic arrangement of a hot wire type instrument.

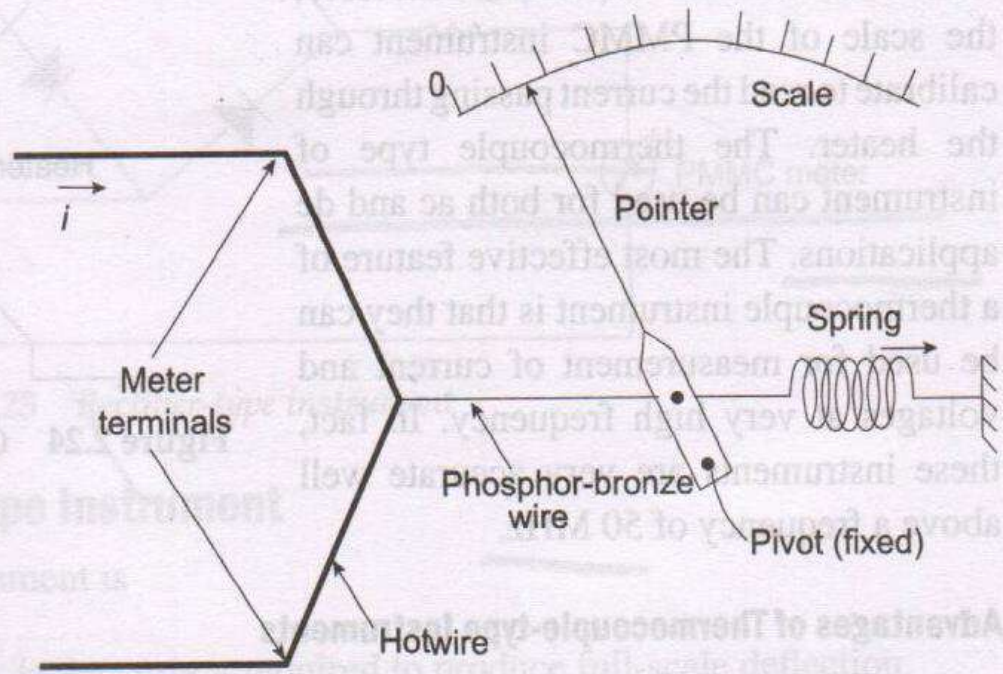

Figure 2.23 *Hot-wire instruments*

Advantages of Hot-wire-type Instruments

1. The deflection depends upon only the rms value of the current flowing through the wire, irrespective if its waveform and frequency. Hence, the instrument can used for ac as well as dc system.
2. The calibration is same for ac as well as dc measurement. So it is a transfer-type instrument.
3. They are free from stray magnetic fields because no magnetic field is used to cause their operation.
4. It is cheap in cost and simple in construction.
5. With suitable adjustments, error due to temperature variation can be made negligible.
6. This type of instruments are quite suitable for very high frequency measurement.

Disadvantages of Hot-wire-type Instruments

1. Power consumption is relatively high.
2. Nonuniform scale.
3. These are very sluggish in action as time is taken in heating up the wire.
4. The deflection of the instrument is not the same for ascending and descending values.
5. The reading depends upon the atmospheric temperature.

2.12.2 Thermocouple-Type Instrument

When two metals having different work functions are placed together, a voltage is generated at the junction which is nearly proportional to the temperature of the junction. This junction is called a thermocouple. This principle is used to convert heat energy to electrical energy at the junction of two conductors as shown in Figure 2.24.

The heat at the junction is produced by the electrical current flowing in the heater element while the thermocouple produces an emf at its output terminals, which can be measured with the help of a PMMC meter. The emf produced is proportional to the temperature and hence to the rms value of the current. Therefore, the scale of the PMMC instrument can calibrate to read the current passing through the heater. The thermocouple type of instrument can be used for both ac and dc applications. The most effective feature of a thermocouple instrument is that they can be used for measurement of current and voltages at very high frequency. In fact, these instruments are very accurate well above a frequency of 50 MHz.

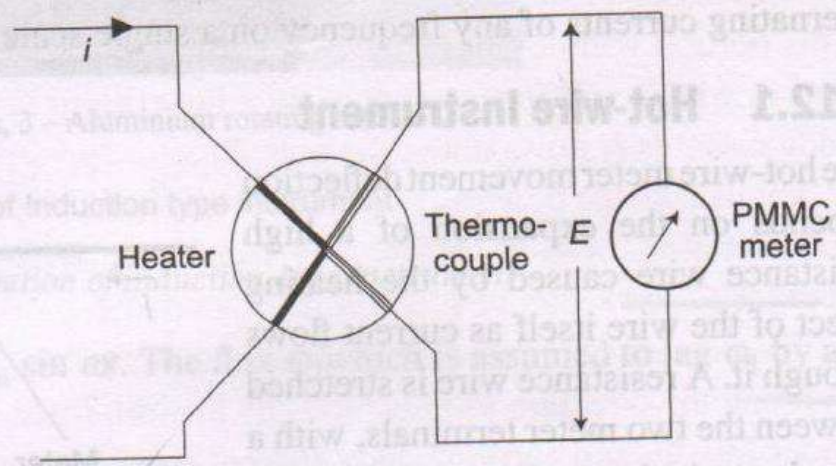

Figure 2.24 *Circuit diagram of thermocouple instrument*

Advantages of Thermocouple-type Instruments

1. These are not affected by stray magnetic fields.
2. They have very high sensitivity.

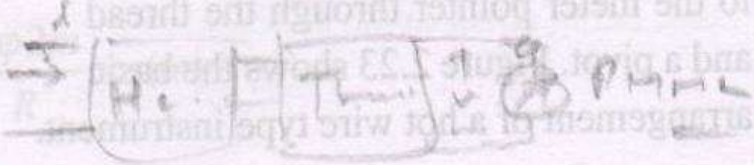

3. The indication of these instruments are practically unaffected by the frequency and waveform of the measuring quantity. Hence these instruments can be used for measurement of currents upto frequencies of 50 MHz and give accuracy as high as 1%.
4. These instruments are very useful as transfer instruments for calibration of dc instruments by potentiometer and a standard cell.

Disadvantages of Thermocouple-Type Instruments

1. Considerable power losses due to poor efficiency of thermal conversion.
2. Low accuracy of measurement and sensitivity to overloads, as the heater operates at temperatures close to the limit values. Thus, the overload capacity of such instrument is approximately 1.5 times of full-scale current.
3. The multi-voltmeters used with thermo-elements must be necessarily more sensitive and delicate than those used with shunts, and therefore, requires careful handling.

Rectifiers

The basic arrangement of a rectifier type of instrument using a full-wave rectifier circuit is shown in Figure 2.25. If this instrument is used for measuring ac quantity then first the ac signal is converted to dc with the help of the rectifier. Then this dc signal is measured by the PMMC meter. The multiplier resistance R_s, is used to limit the value of the current in order that it does not exceed the current rating of the PMMC meter.

These types of instruments are used for light current work where the voltage is low and resistances high.

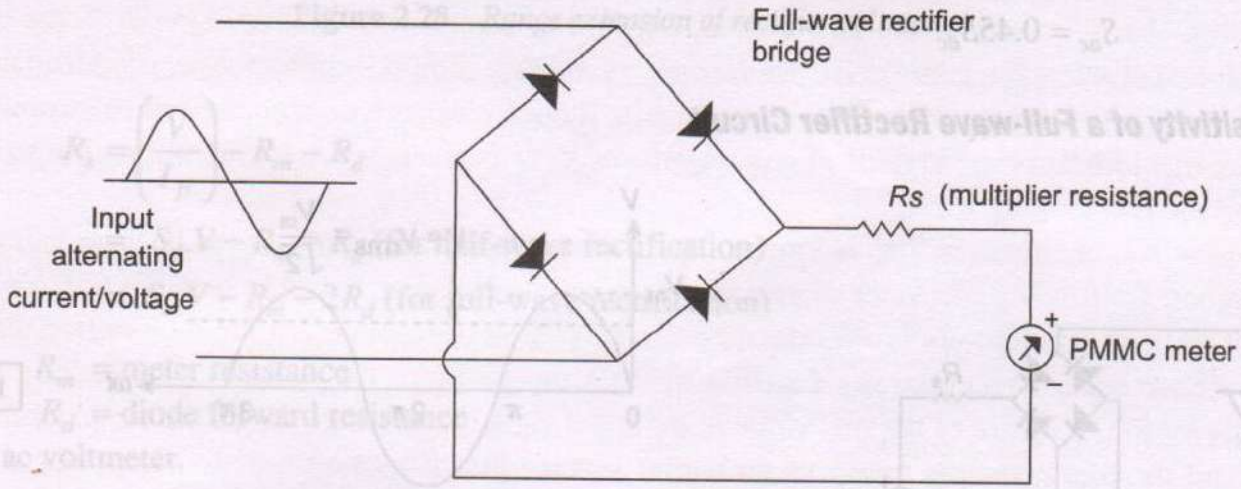

Figure 2.25 *Rectifier-type instrument*

2.13.1 Sensitivity of Rectifier-Type Instrument

The dc sensitivity of a rectifier-type instrument is

$$S_{dc} = \frac{1}{I_{fs}}\ \Omega/v$$ where I_{fs} is the current required to produce full-scale deflection.

1. Sensitivity of a Half-wave Rectifier Circuit

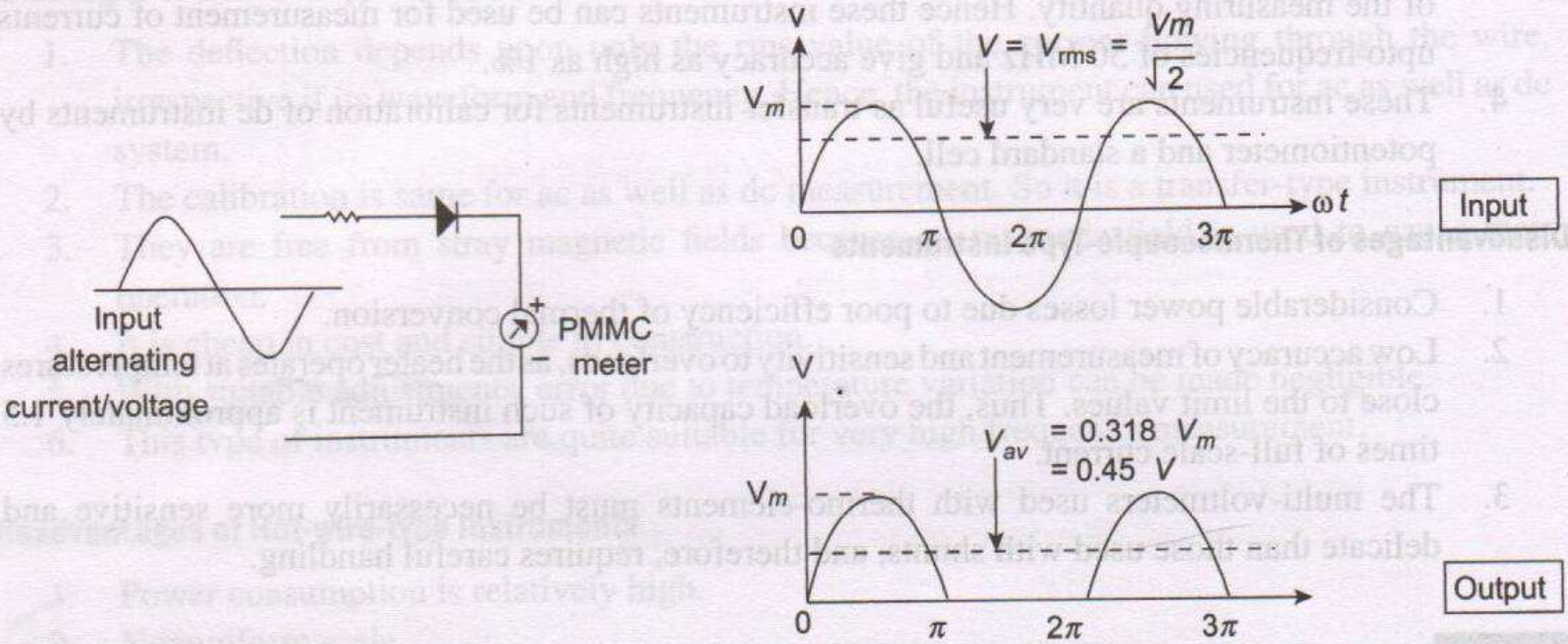

Figure 2.26 *Half-wave rectifier*

1. Sensitivity of a Half-wave Rectifier Circuit

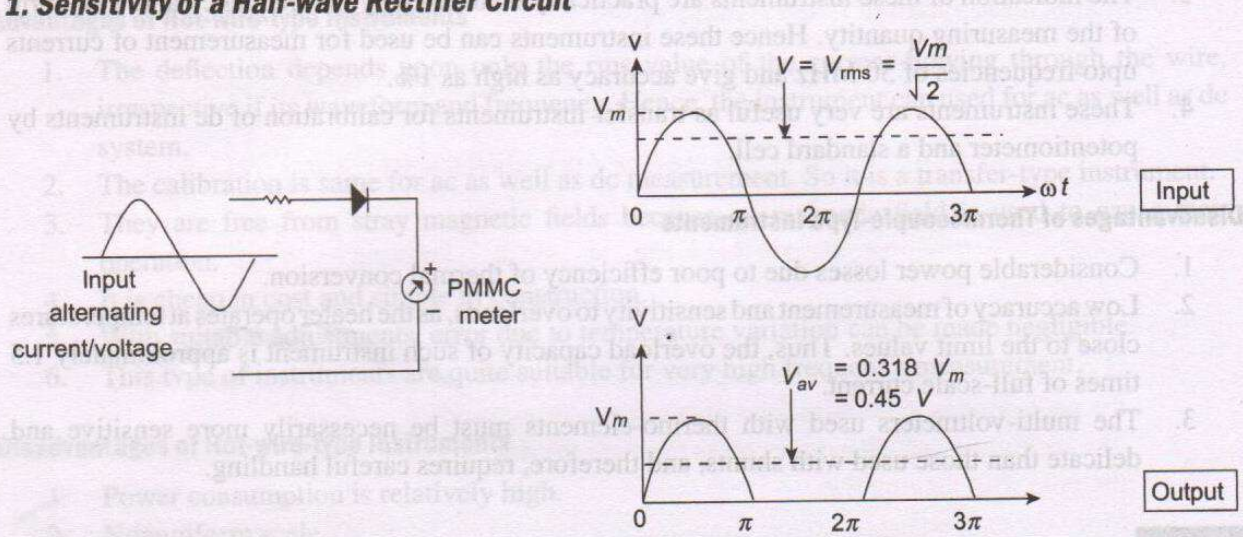

Figure 2.26 *Half-wave rectifier*

$$V_{av} = \frac{1}{2\pi}\int_0^{\pi} V_m \sin\omega t \, d\omega t = \frac{V_m}{\pi} = 0.318V_m = 0.45 \text{ V} \tag{2.52}$$

Hence, the sensitivity of a half-wave rectifier instrument with ac is 0.45 times its sensitivity with dc and the deflection is 0.45 times that produces with dc of equal magnitude V.

$$S_{ac} = 0.45S_{dc} \tag{2.53}$$

2. Sensitivity of a Full-wave Rectifier Circuit

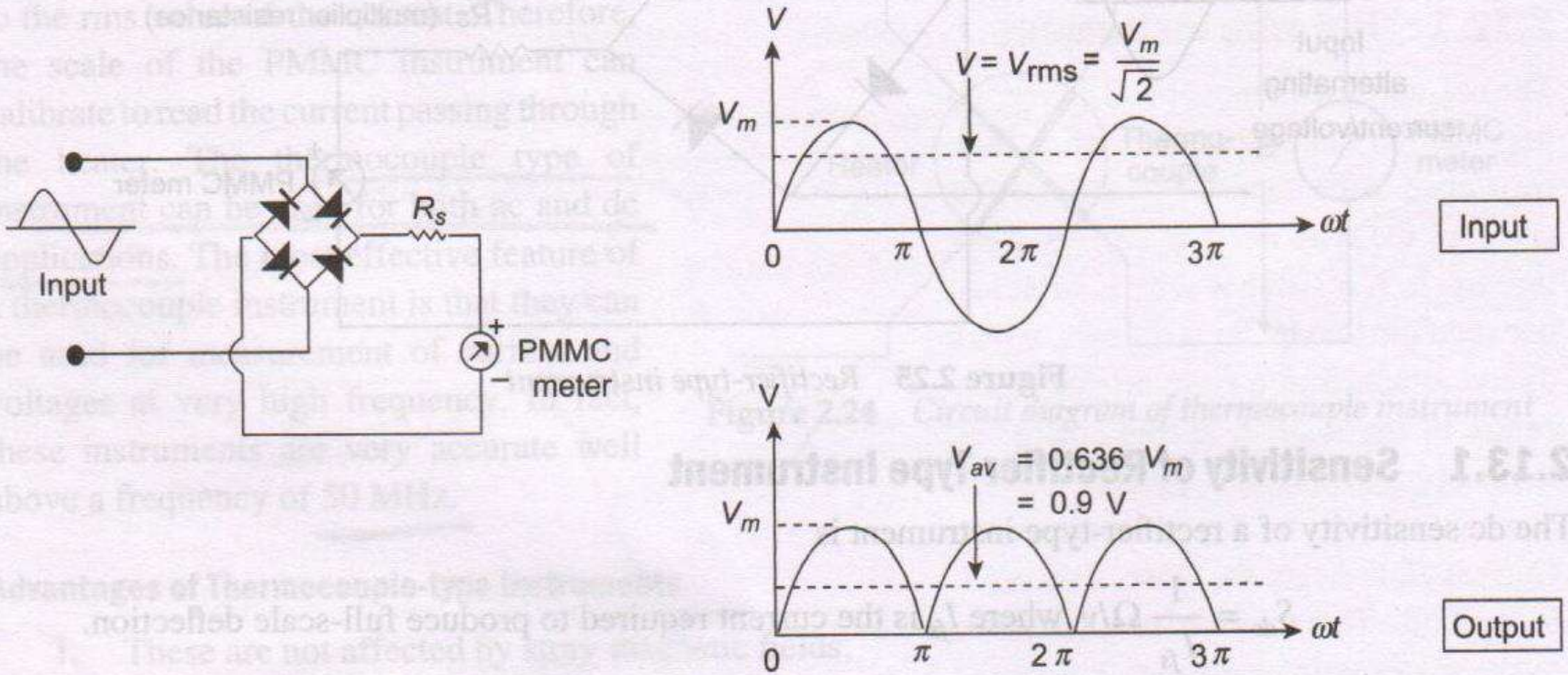

Figure 2.27 *Full-wave rectifier*

2. Sensitivity of a Full-wave Rectifier Circuit

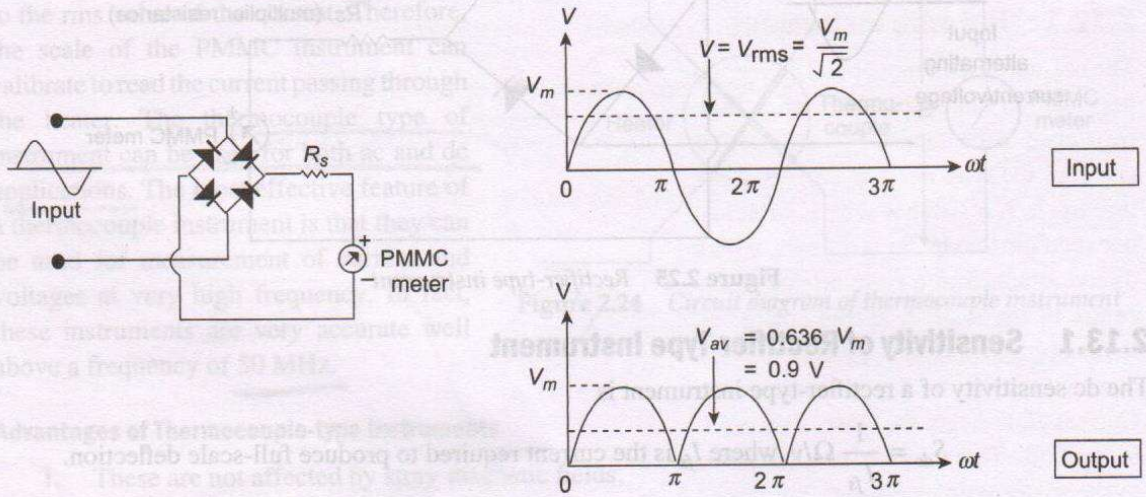

Figure 2.27 *Full-wave rectifier*

Figure 2.27 shows a full-wave rectifier circuit along with the input and output waveform. Average value of voltage/current for full-wave rectifier,

$$V_{av} = \frac{1}{\pi}\int_0^{\pi} V_m \sin \omega t \, d\omega t = \frac{2V_m}{\pi} = 0.636V_m = 0.9 \text{ V} \tag{2.54}$$

So the deflection is 0.9 times in a full-wave rectifier instrument with an ac than that produced with dc of equal magnitude V.

Sensitivity of a full-wave rectifier instrument with an ac is 0.9 times its sensitivity with dc.

$$S_{ac} = 0.9S_{dc} \tag{2.55}$$

2.13.2 Extension of Range of Rectifier Instrument as Voltmeter

Suppose it is intended to extend the range of a rectifier instrument which uses a PMMC instrument having a dc sensitivity of S_{dc}.

Let, v = voltage drop across the PMMC instrument

V = applied voltage

Therefore, for dc operation, the values of series resistance (multiplier) needed can be calculated from Figure 2.28 as

$$V = R_S \cdot I_{fs} + R_d \cdot I_{fs} + R_m \cdot I_{fs}$$

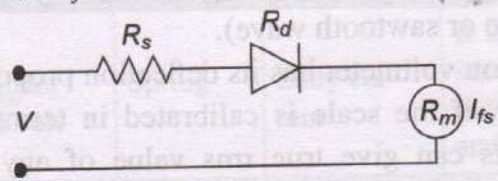

Figure 2.28 *Range extension of rectifier voltmeter*

$$R_s = \left(\frac{V}{I_{fs}}\right) - R_m - R_d$$

$$= S_{dc}V - R_m - R_d \text{ (for half-wave rectification)} \quad (2.56)$$

$$= S_{dc}V - R_m - 2R_d \text{ (for full-wave rectification)}$$

where R_m = meter resistance

R_d = diode forward resistance

For ac voltmeter,

$$R_s = S_{ac}V - R_m - R_d = 0.45S_{dc}V - R_m - R_d \text{ (for half-wave)}$$

$$= S_{ac}V - R_m - 2R_d = 0.9\,S_{dc}V - R_m - R_d \text{ (for full-wave)} \quad (2.57)$$

Limitations

1. Rectifier instruments are only accurate on the waveforms on which they are calibrated. Since calibration assumes pure sine waves, the presence of harmonics gives erroneous readings.
2. The rectifier is temperature sensitive, and therefore, the instrument readings are affected by large variations of temperature.

Applications

1. The rectifier instrument is very suitable for measuring alternating voltages in the range of 50–250 V.
2. The rectifier instrument may be used as a micrometer or low milliammeter (up to 10–15 mA). It is not suitable for measuring large currents because for larger currents the rectifier becomes too bulky and providing shunts is impracticable due to rectifier characteristics.
3. Rectifier instruments find their principal application in measurement in high-impedance circuits at low and audio frequencies. They are commonly used in communications circuits because of their high sensitivity and low power consumption.

True RMS Voltmeters

The commonly available multimeters are average or peak reading instruments, and the rms values they display are based on the signal mean value. They multiply the average value with some factor to convert it to the rms reading. For this reason, conventional multimeters are only suited for sinusoidal signals. For measuring rms value of a variety of signals over a wide range of frequencies, a new kind of voltmeter—called the True RMS (TRMS) voltmeter has been developed. Since these voltmeters do not measure rms value of a signal based on its average value, they are suited for any kind of waveforms (such as sine wave, square wave or sawtooth wave).

The conventional moving-iron voltmeter has its deflection proportional to the square of the current passing through its coil. Thus, if the scale is calibrated in terms of square root of the measured value, moving-iron instruments can give true rms value of any signal, independent of its wave shape. However, due to large inertia of the mechanical moving parts present in such a moving iron instrument, the frequency bandwidth of such a true rms voltmeter is limited. Similar is the case for electrodynamometer type instruments which once again have their deflecting torque proportional to the current through their operating coil. But once again, though electrodynamometer-type instruments can give true rms indication of a signal of any waveform, their frequency bandwidth is also limited due to their mechanical moving parts.

True RMS Voltmeters

Modern-day true rms reading voltmeters are made to respond directly to the heating value of the input signal. To measure rms value of any arbitrary waveform signal, the input signal is fed to a heating element and a **thermocouple** is placed very close to it. A thermocouple is a junction of two dissimilar metals whose contact potential is a function of the temperature of the junction. The heating value is proportional to the square of the rms value of the input signal. The heater raises the temperature of the heater and the thermocouple produces an output voltage that is proportional to the power delivered to the heater by the input signal. Power being proportional to the square of the current (or voltage) under measurement, the output voltage of the thermocouple can be properly calibrated to indicate true rms value of the input signal. This way, such a thermal effect instrument permits the determination of true rms value of an unknown signal of any arbitrary waveform. Bandwidth is usually not a problem since this kind of principle can be used accurately even beyond 50 MHz. Figure 2.28 shows such an arrangement of thermocouple based true rms reading voltmeter.

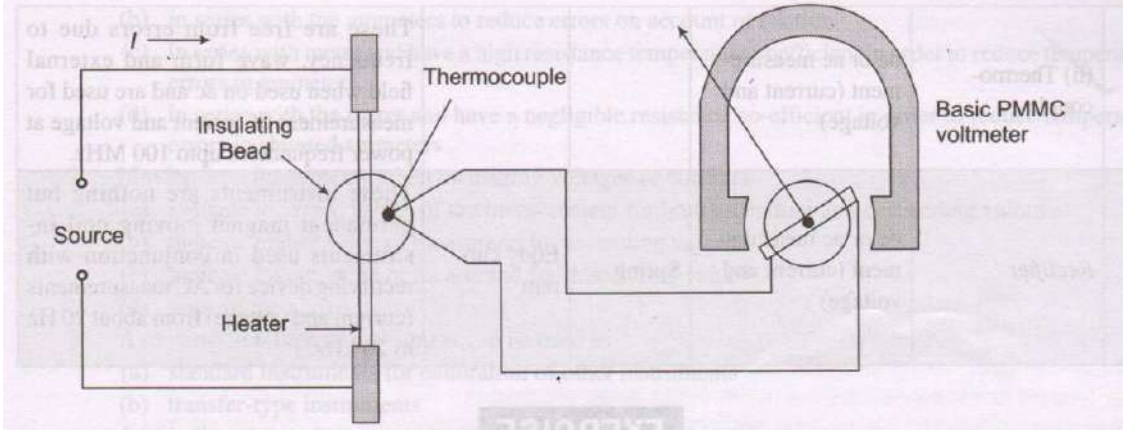

Figure 2.28 *Thermocouple based true rms reading voltmeter*

Comparison of Instruments

Sl. No.	Type of Instruments	Suitability for type of measurement	Type of control	Type of damping	Specialty
1.	*Moving Coil* (i) PMMC	dc measurement (current and voltage only)	Spring	Eddy current	It is most accurate type for dc measurements and most widely used for measurement of dc voltage, current and resistance.
	(ii) Dynamometer	dc or ac measurement (current, voltage and power)	Spring	Air friction	Mainly used as wattmeter. Also used as standard meter for calibration and as transfer instrument.
2.	*Moving Iron*	dc or ac measurement (current, voltage)	Spring or gravity control	Air friction	It is cheaper to manufacture and mostly used as an indicating instrument. It is very accurate for ac and dc, if properly designed.
3.	*Electrostatic*	dc or ac (voltage only)	Gravity or spring	Air friction	These instruments have very low power consumption and can be made to cover a large range of voltage. Usually, range is above 500 volts.
4.	*Induction*	ac measurement (current, voltage, Power and energy) only.	Spring	Eddy current	Ammeters and voltmeters of this type are expensive and not of high degree of accuracy. These instruments are mainly used for measurement of power and energy in ac circuits.

Comparison of Instruments

5.	*Thermal* (i) Hot wire	dc or ac measurement (current, voltage and power)	Spring	Eddy current	These instrument have same calibration for both ac and dc. These are free from errors due to frequency, wave form and external field when used on ac, therefore, these are particularly used for ac measurement.
	(ii) Thermocouple	dc or ac measurement (current and voltage)			These are free from errors due to frequency, wave form and external field when used on ac and are used for measurement of current and voltage at power frequencies upto 100 MHz.
6.	*Rectifier*	dc or ac measurement (current and voltage)	Spring	Eddy current	These instruments are nothing but permanent magnet moving coil instruments used in conjunction with rectifying device for AC measurements (current and voltage) from about 20 Hz to 20 kHz.

Thank you